MOBILE TOOL BASES Read our detailed report p.80

Better Homes and Gardens®

WOOD®

DECEMBER 1998 ISSUE 110

THE WORLD'S LEADING WOODWORKING MAGAZINE

Extraordinary Steamer Trunk

Page 56

Make Raised Panels without large-diameter router bits

Page 62

U.S.A. $5.95

Display until December 1

http://www.woodmagazine.com

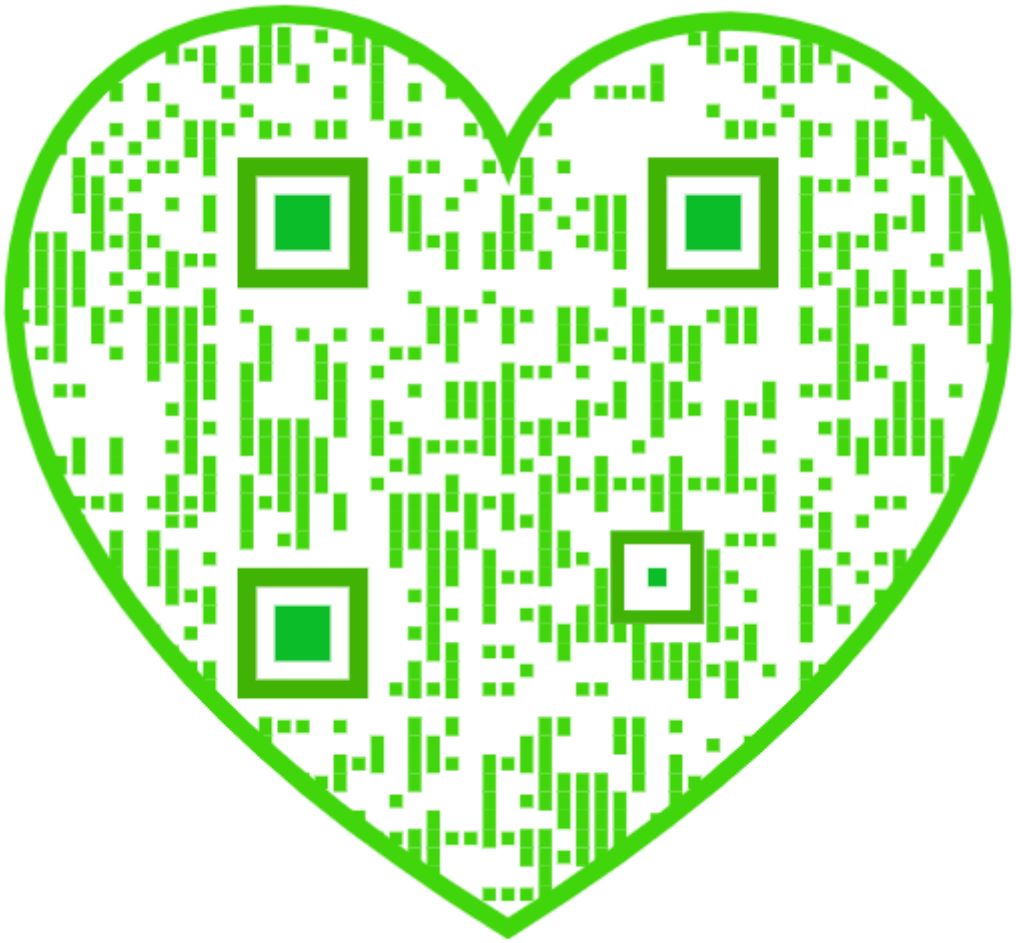

INDUSTRIAL GRADE ROUTER BITS

ISO 9002

Largest Selection in the Entire U.S.A.!

ISO 9002

Available Exclusively From:

GRIZZLY INDUSTRIAL, INC.

Double Fluted Straight Bits

Used for cutting dadoes, rabbets, circles and other general purpose routing. Can be used in solid wood, plywood, certain plastics and laminated material. Use shortest length (B) for work to be done. For use in hand-held routers only.

1/4" SHANK

MODEL	CUTTER DIA. A	CUT. LENGTH B	REG. PRICE	SALE PRICE
C1001	1/4"	3/4"	~~$5.95~~	$4.95
C1003	3/8"	3/4"	~~$5.95~~	$4.95
C1004	1/2"	3/4"	~~$7.95~~	$6.95
C1005	5/8"	11/16"	~~$9.95~~	$8.95
C1006	3/4"	3/4"	~~$9.95~~	$8.95
C1007	1"	3/4"	~~$11.95~~	$10.95
C1037	23/32"	3/4"	~~$11.95~~	$10.95

1/2" SHANK

MODEL	CUTTER DIA. A	CUT. LENGTH B	REG. PRICE	SALE PRICE
C1008	1/4"	3/4"	~~$5.95~~	$4.95
C1010	3/8"	3/4"	~~$5.95~~	$4.95
C1011	1/2"	1-3/16"	~~$7.95~~	$6.95
C1013	5/8"	1-1/8"	~~$9.95~~	$8.95
C1015	3/4"	1-1/8"	~~$11.95~~	$10.95
C1017	1"	1-1/8"	~~$11.95~~	$10.95

Reversible Stile & Rail - Roman Ogee

with Guide Bearing

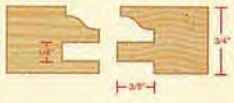

MODEL	SHANK	CUTTER DIA.	CUTTER LENGTH	REG. PRICE	SALE
C1392	1/2"	1-5/8"	13/16"	~~$49.95~~	$47.95

Reversible Stile & Rail - Ogee

with Guide Bearing

MODEL	SHANK	CUTTER DIA.	CUTTER LENGTH	REG. PRICE	SALE
C1652	1/2"	1-5/8"	13/16"	~~$49.95~~	$47.95

Reversible Stile & Rail - Beveled

with Guide Bearing

MODEL	SHANK	CUTTER DIA.	CUTTER LENGTH	REG. PRICE	SALE
C1653	1/2"	1-5/8"	13/16"	~~$49.95~~	$47.95

Reversible Stile & Rail - Classical

with Guide Bearing

MODEL	SHANK	CUTTER DIA.	CUTTER LENGTH	REG. PRICE	SALE
C1654	1/2"	1-5/8"	13/16"	~~$49.95~~	$47.95

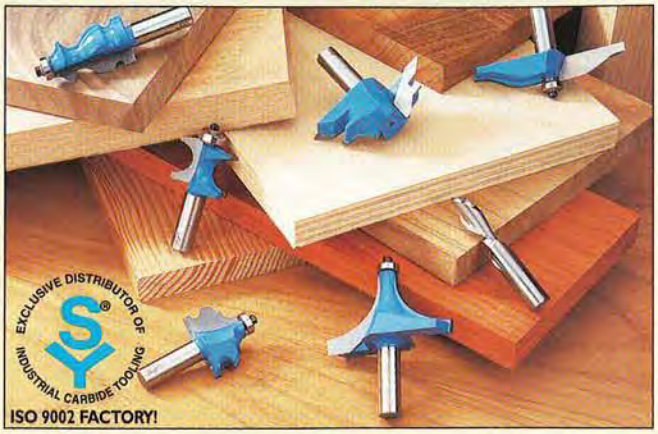

Anti-kickback Roundover Bits

with Guide Bearing

Roundover bits are used to make quarter rounds of various radii. Also used to soften edges, especially if making anything a child would use. Everyone needs a drawer full of these. So many uses we can't list them all.

1/4" SHANK

MODEL	CUTTER DIA. A	CUT. LENGTH B	RADIUS r	REG. PRICE	SALE PRICE
C1713	5/8"	3/8"	1/16"	~~$9.95~~	$8.95
C1714	7/8"	3/8"	1/8"	~~$9.95~~	$8.95
C1715	7/8"	3/8"	3/16"	~~$9.95~~	$8.95
C1716	1"	1/2"	1/4"	~~$10.95~~	$9.95
C1717	1-1/8"	1/2"	5/16"	~~$11.95~~	$10.95
C1718	1-1/4"	5/8"	3/8"	~~$13.95~~	$12.95
C1719	1-1/2"	5/8"	1/2"	~~$14.95~~	$13.95

1/2" SHANK

MODEL	CUTTER DIA. A	CUT. LENGTH B	RADIUS r	REG. PRICE	SALE PRICE
C1720	3/4"	3/8"	1/8"	~~$9.95~~	$8.95
C1721	7/8"	3/8"	3/16"	~~$9.95~~	$8.95
C1722	1"	1/2"	1/4"	~~$10.95~~	$9.95
C1723	1-1/8"	1/2"	5/16"	~~$11.95~~	$10.95
C1724	1-1/4"	5/8"	3/8"	~~$13.95~~	$12.95
C1725	1-1/2"	3/4"	1/2"	~~$14.95~~	$13.95

NEW!

4-pc. Anti-kickback Roundover Set

Set includes: 1/8"r, 1/4"r, 3/8"r, 1/2"r bits, bead cutting conversion bearing and wooden box.

C1780	1/4" SHANK	$39.95
C1781	1/2" SHANK	$39.95

NEW!

20-pc. Anti-kickback Set

1/4" set includes: Flush Trim, Roman Ogee, 1/4", 3/8", 1/2", 3/4" Straight, 45° Chamfer, 1/8"r, 1/4"r, 3/8"r Roundover, 1/4", 1/2" Rabbeting, 3/8", 1/2" Dovetail, 1/4"r, 3/8"r Cove, 3/8" Core Box, 3/8" Key-Hole, Panel Bit, 3/8" V-Groove and wooden box. 1/2" set includes: Flush Trim, Roman Ogee, 1/4", 3/8", 1/2", 3/4" Straight, 45° Chamfer, 1/8"r, 1/4"r, 3/8"r Roundover, 1/4", 1/2" Rabbeting, 1/2", 3/4" Dovetail, 1/4"r, 3/8"r Cove, 5/8", 3/4" Core Box, Panel Bit, 3/4" V-Groove and wooden box.

C1782	1/4" SHANK	$169.95
C1783	1/2" SHANK	$169.95

Circle No. 860

CALL TODAY FOR YOUR FREE 1998 WOODWORKING CATALOG — ORDER 24 HOURS A DAY!

146697658

1-800-523-4777

CUSTOMER SERVICE: (717) 326-3806 FAX: (800) 438-5901 WEBSITE: http://www.grizzlyindustrial.com

77S

MEDIA CODE

VISIT OUR 3 SHOWROOM LOCATIONS:

1821 Valencia St., Bellingham, WA — 4651 Hickory Hill Rd., Memphis, TN — 2406 Reach Road, Williamsport, PA

ISSUE NO. 110 DECEMBER 1998
This issue's cover wood grain: red pine

Page 51

Better Homes and Gardens® WOOD®

THE WORLD'S LEADING WOODWORKING MAGAZINE

CONTENTS

47 An up-close look at a tree
See our first installment in a new series of articles that offer a fresh look at wood science.

51 Turning back the times
Meet a New England ornamental woodturner who lets his amazing lathes do all of the work.

62 Raised-panel doors
Discover a new way to create raised-panel doors without buying expensive router bits.

72 Craft a country finish
See our tricks for aging painted furniture.

80 Wheel deals
Add flexibility and efficiency to your shop with one or more of these mobile tool bases.

92 Good reads
This Christmas ask for a woodworking book.

Page 66

Page 80

Page 56

Page 62

Page 84

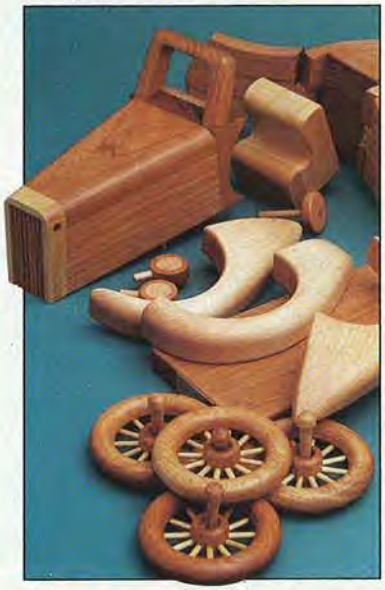

Woodworking projects

56 At-your-service steamer trunk
Learn to work with ⅛" bending plywood while making our cedar-lined storage project.

66 Country-fresh five-drawer chest
Build an accommodating bedroom chest that works in both country and tradtional decors.

74 Turnin' and tossin'
Give shape to this pleasing salad bowl set.

78 Salad tongs with a twist
Let scissor action put the pinch on veggies.

84 Auburn "boattail" speedster
You'll enjoy cutting and assembling the parts for this take-apart executive toy.

90 Multipurpose storage
Get organized with our super shelving system.

SHORT-SUBJECT FEATURES

4 The Editor's Angle
8 Talking Back
10 Yesterday's Tools: The No. 45 Plane
12 Shop Skills: Lock-Rabbet Drawer Joints
16 What To Know About Pneumatic Sanders
22 Where Safety Begins: Router Feed
24 Workshop Puzzler
28 Great Ideas For Your Shop: Circle Jig
30 Ask *WOOD*
34 Tips From Your Shop (And Ours)
94 Products That Perform
118 Wood Anecdote: Balsam Fir
120 Finishing Touches

THE T

INTRODUCING SILVERADO. THE

A truck has a job to do. And our truck did the job about as well as could be done. But we knew we could build a better truck.[1] And we did. Its name is Silverado.®

Silverado isn't just any new truck. It's The Truck. The new full-size pickup from Chevrolet.® Silverado is the only new full-size pickup built on the tradition of the best long-term quality.[2] The only new full-size pickup built on the tradition of the highest resale value.[3]

We took the most dependable, longest-lasting full-size pickup on the road[4] and made it bigger, faster,[5] stronger and smarter. Silverado has a bigger extended cab exterior than Dodge Ram or Ford F-150. A more powerful V8 than any other pickup.[6] A hydroformed steel frame that's the strongest it's

All claims exclude other GM products. [1]The 1999 Chevy Silverado is manufactured by the North American Truck Platform of General Motors Corporation. [2]Chevy C/K claim based on a GM product quality and workmanship owner satisfaction survey of 1992-1996 full-line, full-size pickup manufacturers. [3]Chevy C/K claim based on overall average MSRP vs. trade-in values of 1990-1996 models. Source: National Auto Research Black Book Official Used Car Market Guide. [4]Dependability based on longevity: 1981-

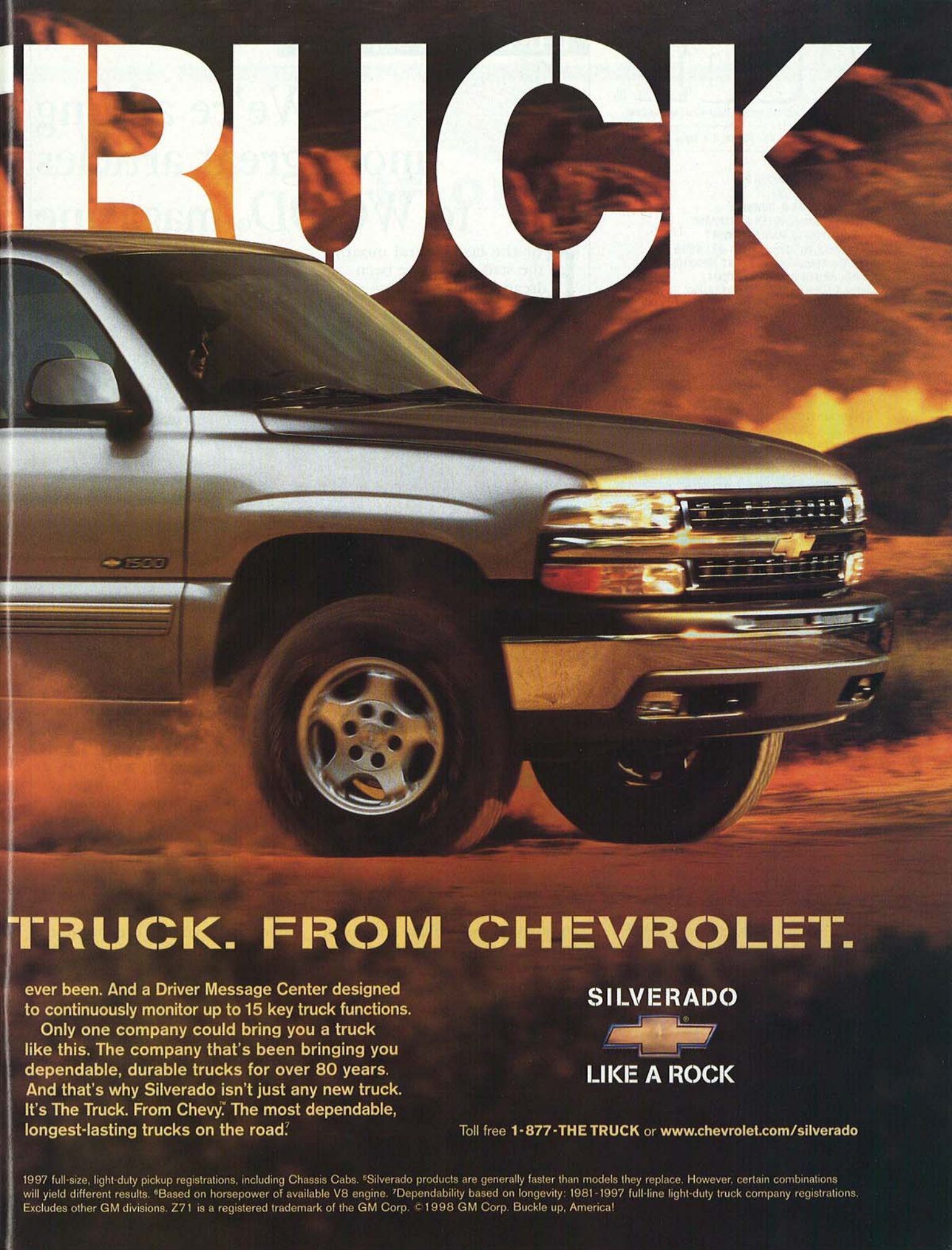

TRUCK. FROM CHEVROLET.

ever been. And a Driver Message Center designed to continuously monitor up to 15 key truck functions.

Only one company could bring you a truck like this. The company that's been bringing you dependable, durable trucks for over 80 years. And that's why Silverado isn't just any new truck. It's The Truck. From Chevy.™ The most dependable, longest-lasting trucks on the road.[7]

SILVERADO

LIKE A ROCK

Toll free **1-877-THE TRUCK** or **www.chevrolet.com/silverado**

1997 full-size, light-duty pickup registrations, including Chassis Cabs. [5]Silverado products are generally faster than models they replace. However, certain combinations will yield different results. [6]Based on horsepower of available V8 engine. [7]Dependability based on longevity: 1981-1997 full-line light-duty truck company registrations. Excludes other GM divisions. Z71 is a registered trademark of the GM Corp. © 1998 GM Corp. Buckle up, America!

Better Homes and Gardens®
WOOD®
THE WORLD'S LEADING WOODWORKING MAGAZINE

DECEMBER 1998 • Vol. 15, No. 8 • Issue No. 110

Editor LARRY CLAYTON
Managing Editor JIM HARROLD
Art Director C. L. GATZKE
Design Editor JAMES R. DOWNING
Senior Editor/Features PETER J. STEPHANO
Senior Editor/How-To MARLEN KEMMET
Assistant Managing Editor/Products BILL KRIER
Senior Editor/Special-Interest LARRY JOHNSTON
General-Interest Editor DAVE CAMPBELL
Associate Art Director PERRY A. McFARLIN
Assistant Design Editor/Project Builder JAN HALE SVEC
Project Builder CHARLES I. HEDLUND
Senior Graphic Designer CHERYL A. CIBULA
Production/Office Manager MARGARET CLOSNER
Administrative Assistant SHERYL MUNYON
Art Business Office Secretary BARBARA HELPS
Correspondence Writer ROBBY PEDERSEN
Contributing Editors KIM DOWNING, DAVE HENDERSON, LORNA JOHNSON, ROXANNE LeMOINE, BOB McFARLIN

©Copyright Meredith Corporation 1998
All rights reserved. Printed in the U.S.A.

Better Homes and Gardens® *WOOD*® magazine (ISSN-0743-894X) is published nine times a year in January, February, March, April, June, August, October, November, and December by Meredith Corporation, 1716 Locust St., Des Moines, IA 50309-3023. Periodicals postage paid at Des Moines, Iowa, and additional mailing offices. Better Homes and Gardens trademark registered in Canada and Australia. Marca Registrada en México. **ONE-YEAR SUBSCRIPTION PRICES:** U.S. and its possessions, $27; Canada, $39; other countries, $47. Canadian GST Reg. #BN 12348 2887 RT. **POSTMASTER:** Send address changes to *Better Homes and Gardens WOOD* Magazine, P.O. Box 55050, Boulder, CO 80328-5050.

CUSTOMER SERVICE INFORMATION: For service on your magazine subscription, including change of address, phone toll-free **800/374-9663.** Or, write to *Better Homes and Gardens* ***WOOD*** Magazine, P.O. Box 55050, Boulder, CO 80328-5050. Please enclose your address label from a recent issue.
EDITORIAL INFORMATION: Address letters and questions to The Editor, ***WOOD*** Magazine, 1716 Locust Street, GA310, Des Moines, IA 50309-3023.
ATTENTION RETAILERS: To carry ***WOOD*** magazine in your store, call 800/659-5990, or write: Select Title Program, ***WOOD*** Magazine, 900 Kingsland, Batavia, IL 60510.

MPA

Better Homes and Gardens®
WOOD Online™
at www.woodmagazine.com

Regular visits to *WOOD ONLINE* are as much a part of woodworking as sawing boards for many woodworkers. The ten discussion groups, in fact, have become a big woodworkers' club—a place to share ideas, find answers, or just visit with people who share your interest. Now, *WOOD ONLINE* features *WOODWORKING* Neighborhood, where you can tell about yourself and even show your work. Click over to the Neighborhood soon to meet the gang. Then follow the simple steps, and build your own homepage.

THE EDITOR'S ANGLE

Guess What!

We're adding more great articles to WOOD® magazine

For the last several months, the staff and I have been dreaming up some exciting new additions to *WOOD* magazine. And beginning with this issue, we're rolling them out for your woodworking inspection.

On *page 47* you'll find the first of a new series of articles we're calling "The Story of Wood." This replaces the popular Wood Profile series that we've run since *WOOD* magazine debuted in 1984. For you newer readers not familiar with Wood Profiles, you can find in-depth printable data on the 13 most popular woodworking wood species featured in that series. Just check out our web site at: www.woodmagazine.com

In "The Story of Wood" articles we will focus on what wood is, how it behaves, what affects it, and how all of these factors determine the way we woodworkers use this most versatile material. In this issue's article, titled "An Up-Close Look at a Tree" (see *page 47*), Features Editor Pete Stephano takes a close look at the anatomy of trees to set the stage for articles that will appear in coming issues. Regular readers of this series will learn about how moisture affects wood, the differences between air-dried and kiln-dried lumber, what causes figure, why wood warps, and a host of other important subjects.

For help in researching these articles, Pete will join forces with the experts at the U.S. Forest Products Lab in Madison,Wisconsin, as well as many other wood technologists and woodworking contacts. You won't want to miss these informative articles.

I'd also like you to take a look at our new "Workshop Puzzler" on *page 24*. Even if you're not into crossword puzzles, we think you'll find ours, which features woodworking words and terms, a fun and easy way to brush up on your woodworking terminology.

And because we know that lots of you are interested in fixing up old furniture pieces, we've got something else up our sleeves, starting in issue 111. And that something is a series of articles under the heading "The Furniture Repair Shop." Over time, we'll share with you helpful hints on how to repair furniture veneer, deal with warped tabletops, spot fake antiques, tighten loose joints, and much more.

Here's hoping that our new brainstorms suit your woodworking fancy. Let us know what you think of them.

Larry Clayton

IF ONLY

SURGEONS

HAD IT THIS GOOD.

BOSCH

THERE ARE NO SECOND CHANCES. THAT'S WHY YOU REACH FOR THE LEGENDARY SAW THAT CREATED THE CATEGORY 50 YEARS AGO. THE WHISPER-QUIET MOTOR THAT HUMS OF SUPERIOR ENGINEERING. THE LINEAR COUNTER BALANCE MECHANISM THAT MINIMIZES VIBRATION. THE MACHINE THAT RAISED THE PRECISION CROSSBAR A FEW SIGNIFICANT HAIRS. NO NEED TO SCRUB UP BEFORE OPERATING.

VARIABLE SPEED JIGSAW

5.0 AMP | 45° BEVEL | WWW.BOSCHTOOLS.COM

ENGINEERED FOR PERFORMANCE

WE COULDN'T HAVE BETTER OURSELVES.

Regarding our patent-pending cutterhead snipe control lock that stabilizes the cutterhead during operation: "Compared to the other machines in the test, the Delta produced the cleanest surface and the least amount of snipe. The other planers in the test also gave us excellent surface finishing, but the Delta stood out as just a bit better."

Woodworker's Journal, January/February 1998

Regarding our quick-change 2-knife system with two high-speed steel, double-edged, reversible knives: "... quick-change knives that we found easy and accurate to install. We found that with the quick-change systems we aligned the knives within .001." And, we could install both knives in about five minutes." "Editors' Choice Top Tool™"

Better Homes & Gardens® Wood,® November 1996

Regarding the fact that you can take precision with you, wherever you go: "The Delta got great marks for quality of cut and portability, and for its innovative cutterhead assembly lock." "Editors' Choice"

American Woodworker,™ December 1996

THE POWER OF THE PROS

All of which leaves us with very little to say except this: If our planer fails to perform up to your expectations within 30 days of purchase, you can return it for a full refund. That's our Superior Performance Guarantee. And now, for a limited time, we'll even throw in an extra set of knives – a $30 value. Call toll free for the name of your nearest Delta dealer. Delta International Machinery Corp., 800-438-2486. In Canada, 519-836-2840.

www.deltawoodworking.com

DELTA
WOODWORKING MACHINERY
A Pentair Company

SAID IT

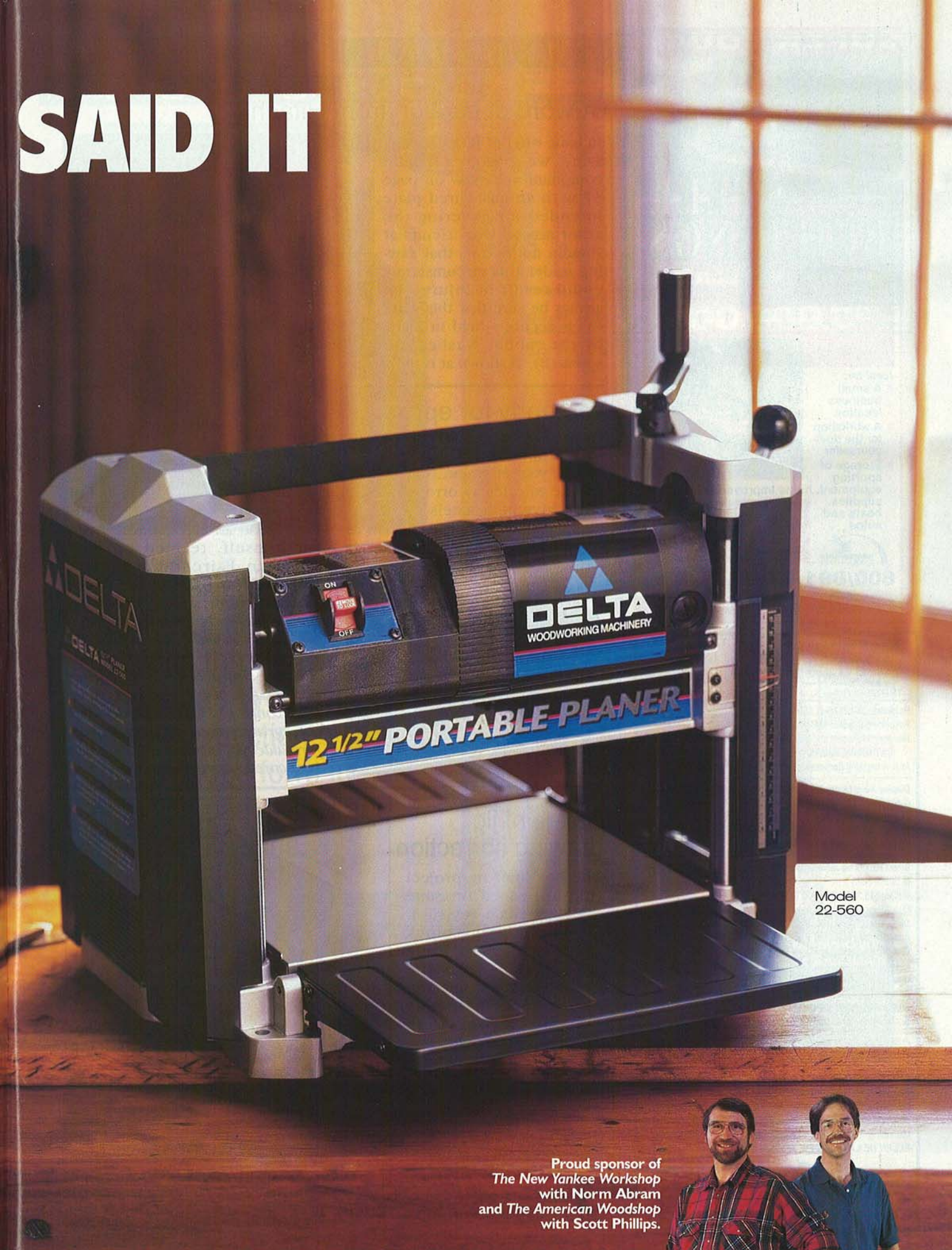

Model
22-560

Proud sponsor of
The New Yankee Workshop
with Norm Abram
and *The American Woodshop*
with Scott Phillips.

SUPER TOUGH

STEEL BUILDINGS

FACTORY DISCOUNTS UP TO $5,000.00!

Ideal for:
- A small business location
- A workshop for the do-it-yourselfer
- Storage of sporting equipment, home improvement supplies, boats and autos

Models Included
20 x 30 30 x 60 51 x 100
25 x 40 45 x 75 55 x 125
other sizes available

AMERICAN STEEL SPAN

800/891-6733 ask for ext. 1218

visit our website - www.steelspan.com

Better Homes and Gardens® WOOD® Advertising & Marketing

THE WORLD'S LEADING WOODWORKING MAGAZINE

Publisher WILLIAM R. REED
Advertising Director MARK HAGEN
Manager, Marketing and New Business Development CATHERINE BJORK
Asst. Advertising Services Manager PAT HENDERSHOTT

Display Advertising: 333 N. Michigan Ave., Suite 1101, Chicago, IL 60601 Phone: 312/853-2890 FAX: 312/580-7906
Eastern Advertising Manager JAMES N. FORD
Western Advertising Manager WILL MURPHY
Administrative Assistant GERALLIE LEGASPI

Direct Response Advertising: 1716 Locust St., GA204, Des Moines, IA 50309-3023
Phone: 515/284-3785 FAX: 515/284-3343
Direct Response Advertising Manager RICH RAINFORTH
Direct Response Advertising CINDY ANDERSON
Administrative Assistant KRISTI HASEK
Classified Advertising: Phone: 800/424-3090 FAX: 312/464-0512

Circulation Director LIZ BREDESON
Associate Circulation Director KATHI PRIEN
Business Manager JANET DONNELLY
Senior Product Manager RICK GROW

Publishing Director JERRY WARD

MEREDITH PUBLISHING GROUP

CHRISTOPHER M. LITTLE, President
BILL MURPHY, Strategic Marketing; MAX RUNCIMAN, Finance; DEAN PIETERS, Operations; BRUCE HESTON, Manufacturing; JERRY KAPLAN, Integrated Marketing; HAL ORINGER, Consumer Marketing; THOMAS L. SLAUGHTER, Group Vice President; ELLEN DE LATHOUDER, Creative Services

Meredith CORPORATION

WILLIAM T. KERR, President and Chief Executive Officer
E. T. MEREDITH III, Chairman of the Executive Committee

TALKING BACK

A word of caution from Hitachi

In issue #104 of *WOOD*® magazine, we showed a Hitachi compound mitersaw on page 57 with an unsecured plate intended for covering the arbor screw. Our friends at Hitachi notified us that sawing under this circumstance could result in injury. So, always be sure that this plate (A) is securely held in place by the rubber washer and screw (B), as shown at *right*.

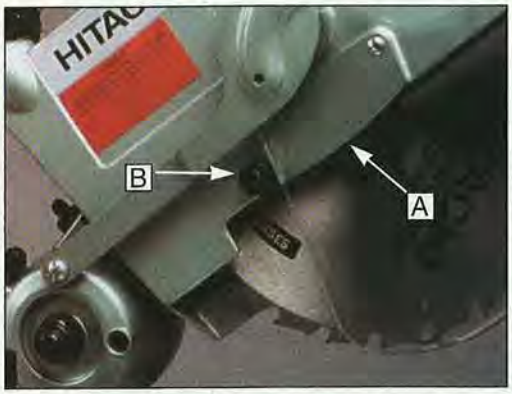

Too early for epoxy

Thanks for the great article and photos of the Spruce Goose in issue #106 of your magazine. Nonetheless, I'd like to offer a correction. The birch plywood panels known as Duramold didn't use epoxy resins as stated in the article. The first epoxy resins were made in 1949, and the Spruce Goose flew in 1947.

Duramold was invented by Col. Virginius Clark in the early 1930s. Col. Clark, an aeronautical inventor himself, teamed up with Sherman Fairchild who sold Duramold's rights to his friend Howard Hughes in 1939 for use on the the Spruce Goose.

—William Winter, Silver Spring, Md.

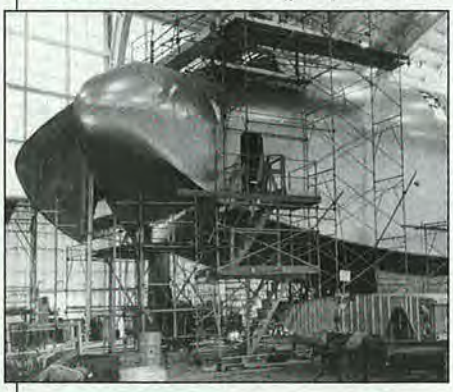

Bill, we contacted the Evergreen AirVenture Museum. An official there confirmed that the plywood for the Spruce Goose was made from formaldehyde-based resins that were heat cured, not epoxy.

Box-joint jig drawing correction

The box-joint jig project that appeared in issue #108, needs a revision. On the indexing block (part I), the 13⁄32" hole should be 1" from the end, not 2" as the Adjustment Assembly drawing on page 46 in the magazine showed.

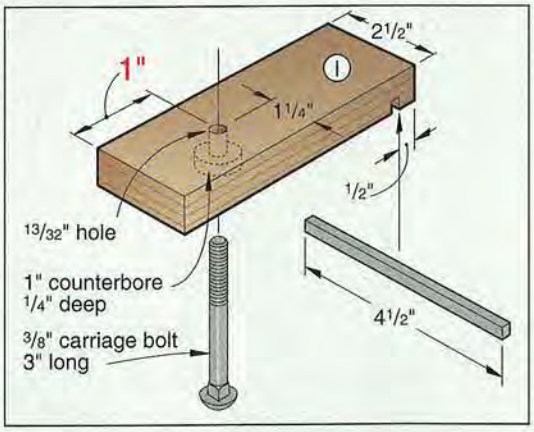

Speak your mind

We welcome your comments, criticisms, suggestions, and yes, even compliments. We'll publish letters of the greatest benefit to our readers. Write to: Talking Back, *WOOD* Magazine, 1716 Locust St., GA310, Des Moines, IA 50309-3023

Woodworking blooper parade

Editor's note: Recently, someone asked fellow woodworkers in our internet site to share their woodworking mistakes. The ensuing discussion made us chuckle, and we thought you might, too.

Many years ago my husband bought a mortising attachment for his drill press. But, it didn't work very well. In fact, he had to lean on the handle with all of his strength and still got nothing that looked like a mortise. So, he took it back to Sears. The salesman inserted a drill bit into my husband's hollow chisel and chucked the whole thing into a drill press. He must have noticed my husband turning red and immediately said, "Maybe your bit is dull; take this one and try again." It worked much better with a drill bit.

—Sue Otis, Buffalo, Minn.

We have a $1,500 solid-oak rolltop desk. I wanted to put a hole in the back for a calculator cord. So I got my holesaw and proceeded. Man, the backboard seemed thick! Oops, I forgot the top rolls up and behind the backboard. Now, I have a 1½" hole in the middle of the rolltop. Needless to say, I leave it open most of the time.

—Rick Potter, Claremont, Calif

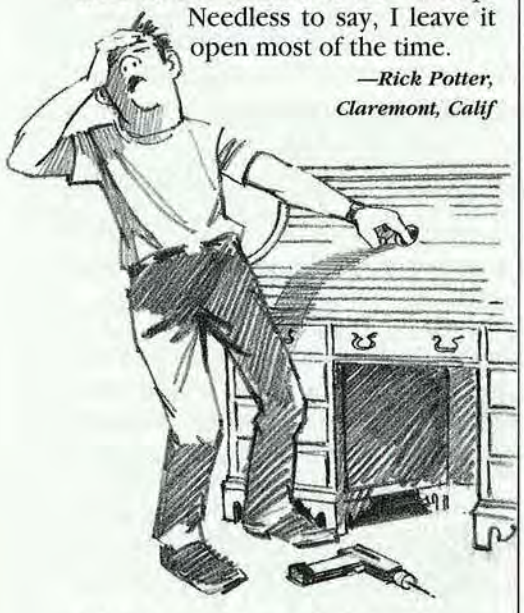

Did these stories bring back memories for you? Please, drop us a line if you'd like to share.

STEVE WALL LUMBER CO.

Quality Hardwoods and Woodworking machinery For The Craftsman and Educational Institutions

				UPS Specials
Ash	4/4	Select	2.25	$ 75.00
Basswood	4/4	Select	1.95	$ 61.00
Birch	4/4	Select	2.40	$ 79.00
Butternut	4/4	1C	2.00	$ 67.00
Cherry	4/4	Select	3.75	$ 96.00
Hickory - Pecan	4/4	Select	2.00	$ 69.00
Mahogany (Genuine)	4/4	Select	3.70	$ 96.00
Maple (Hard)	4/4	Select	2.80	$ 83.00
Maple (Soft)	4/4	Select	2.20	$ 70.00
Poplar	4/4	Select	1.55	$ 62.00
Red Oak	4/4	Select	2.40	$ 78.00
Walnut	4/4	Select	3.35	$ 93.00
White Oak	4/4	Select	2.40	$ 77.00
Cedar (Aromatic Red)	4/4	1C+Btr.	1.65	$ 64.00
Cypress	4/4	Select	2.25	$ 72.00
White Pine	4/4	F.G.	1.15	$ 53.00
Yellow Pine	4/4	Clear	1.80	$ 63.00

Above prices are for 100' quantities of kilndried rough lumber sold by the Bd. Ft. FOB Mayodan, NC. Call for quantity discounts. Other sizes and grades available.

Above prices are 20 bd. ft. bundles of clear kilndried lumber 3"-10" wide • 3'-7' long (Random widths & lengths) Surfaced 2 sides or rough. Delivered UPS prepaid in the Continental U.S.

NOW AVAILABLE
Thin Craft Wood
1/4" • 3/8" • 1/2"
Sizes Available

4/4 Log Run Walnut 100 bd. ft. $145

Also Available Exotic Lumber

STEVE H. WALL LUMBER CO.
BOX 287
MAYODAN, N.C. 27027
336-427-0637
1-800-633-4062
FAX 336-427-7588
Email: wallwood@netmcr.com
Website: www.walllumber.com

Send $1.00 For Lumber Catalog
Prices Subject to Change Without Notice

Circle No. 592

"JUST THE FACTS!"

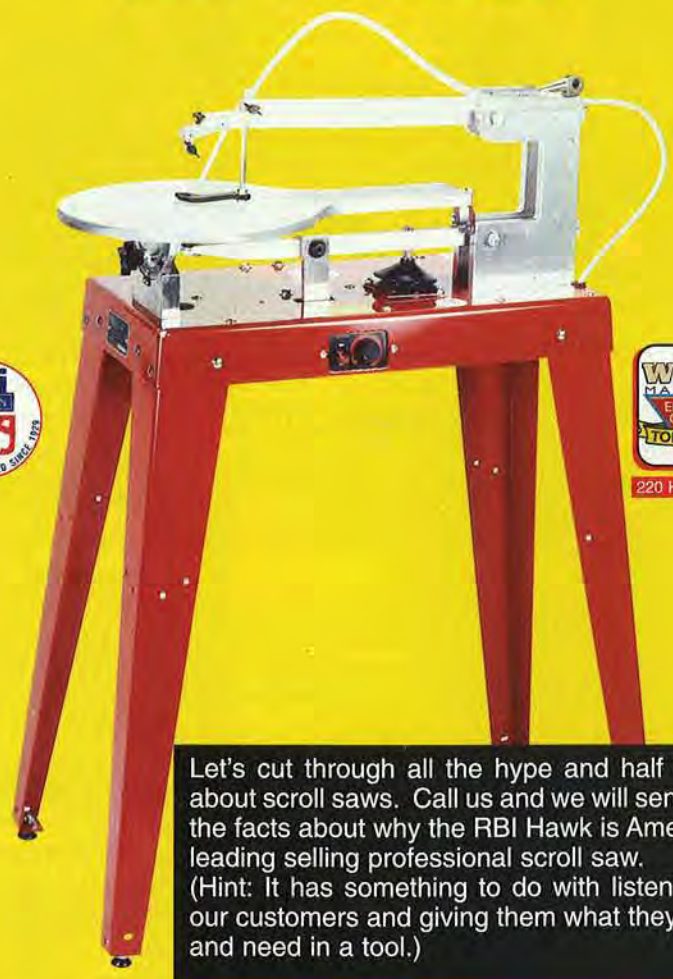

rbi MADE IN USA TESTED AND TRUSTED SINCE 1929

1996 WOOD MAGAZINE EDITORS' CHOICE TOP VALUE

220 HAWK ULTRA

Let's cut through all the hype and half truths about scroll saws. Call us and we will send you the facts about why the RBI Hawk is America's leading selling professional scroll saw.
(Hint: It has something to do with listening to our customers and giving them what they want and need in a tool.)

CALL 1-800-487-2623 FOR YOUR FREE FACT KIT TODAY!

rbindustries, inc.
America's Woodworking Machinery Manufacturer
1801 Vine Street • Harrisonville, MO 64701

Visit the RBI Home page at www.rbiwoodtools.com

H111

Copyright-1998 rbindustries. All rights reserved

SEVEN-WAY WONDER

For versatility, the Stanley 45 was hard to beat

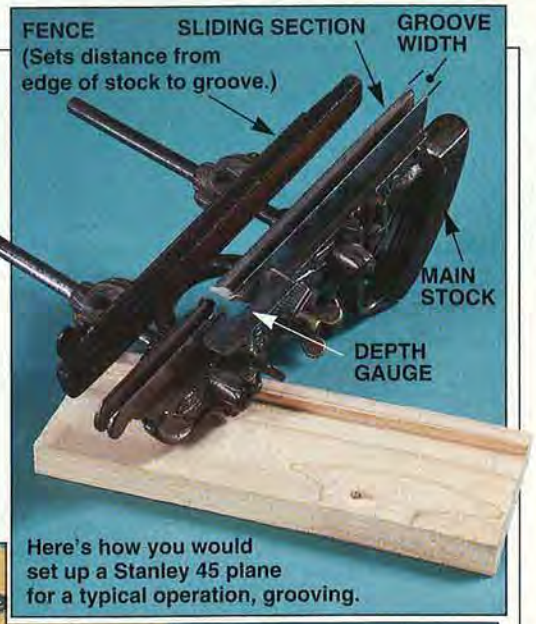

Here's how you would set up a Stanley 45 plane for a typical operation, grooving.

Samuel Colt's .45-caliber revolver may have won the West, but it was the Stanley 45 that helped build it—along with the East, the Midwest, the North, and the South.

The Stanley no. 45 combination plane, introduced in 1883, was a woodworker's wonder. Billed as seven planes in one, it could dado, groove, and rabbet; form edge or center beads; cut tongues and grooves to end- or edge-match boards; shape a sash profile; and rip thin stock with its slitting blade. And unlike some multipurpose tools, it performed every operation well.

Straight out of the box, the 45 looked stupendously complicated, as shown *above*. But the simple instructions (a 12-page, 3½×6" booklet) quickly dispelled any fears, and showed that the 45 was perfectly straightforward.

The three major components—the main stock, the sliding section, and the fence—all slid onto a pair of steel-rod arms (the plane came with long and short ones). Other parts included several stops and gauges, spurs for cutting across the grain, a cam-shaped front rest for certain operations, and a box of 23 cutters. (The number of irons supplied with the plane varied over the years—the earliest ones came with 18.) Another 23 beading, fluting, and reeding cutters were available.

WOOD® magazine's project builder Chuck Hedlund owns the like-new, in-a-box Stanley 45 plane shown *above*. His grandfather purchased it in the 1940s when he built a new house and barn.

A more timeworn model (*top right*) shows how the parts fit together for grooving or plowing. The plane shown made the cut in the board under it.

Stanley manufactured the no. 45 combination plane until 1962. Over its lifetime, it was Stanley's best-selling combo plane.

Many woodworkers and tool collectors today have a special fondness for the 45. Complete late-model planes (types 12–20 incorporating all of the patent adjustment features, manufactured roughly from 1915–1962) in mint or excellent condition often sell in the $300–$500 range to collectors, John Walter, author of *Antique and Collectible Stanley Tools, Guide to Identity and Value*, told us. A complete early plane in its box could bring twice that, he figures.

Many buyers still seek Stanley 45s for their versatility. "Late 45s in good condition often sell in the $200–$250 range as user planes," John said. Given their versatility and quality, he considers 45s a bargain at such prices. And those who are willing to work with a slightly raffish-looking tool can find usable 45s for even less.

Photographs: Hetherington Photography
Planes provided by Chuck Hedlund, Larry Johnston
Written by Larry Johnston

HOT BLADE. COOL CUT.

What is it?

Our new line of Teflon® coated blades. TCS®, short for a new industrial coating by DuPont® that makes our blades run super fast, super smooth and super cool.

How?

- **The coating makes these blades more resistant to friction and heat buildup. The blade stays up to 50% cooler than non-coated blades. This helps the wood glide by the blade with a lot less effort compared to conventional blades. So, you get some major benefits.**
- **This puts less stress on the blade. Studies by DuPont tell us that TCS coated blades last up to 50% longer than conventional blades before sharpening.**
- **It also causes less pull on the saw, 38% to be exact. Which translates into over 1/3 more cutting power. And as a bonus, the smoother cutting action means less wear and tear on the motor.**
- **TCS blades won't bind like conventional blades. The self-lubricating, non-stick finish sheds sappy wood residue before it builds up. So you will get a smoother, more professional cut with TCS blades.**
- **Clean up with these blades is also easy. Pitch and resins just don't stick well to the industrial Teflon. So, even after extensive use, simply wipe clean with hot water.**
- **Don't be concerned about cleaning the blades with water. The Teflon coating makes the blade rust resistant, in fact, you don't need oils, greases or rust-preventatives.**

TEFLON

CONVENTIONAL

The industrial Teflon coating gives you a lot of great benefits, but remember that under the Teflon coating is a Freud blade.

For Catalog Call 1-800-434-3171 or E-Mail freudinc@aol.com

Circle No. 1321

Information courtesy of DuPont Industrial Coatings®.

ISO 9002
CERTIFICATE REGISTRATION # 12 100 9159

freud®

Precisely what you need.

Lock-Rabbet Drawer Joints

Make 'em quickly and easily with your tablesaw

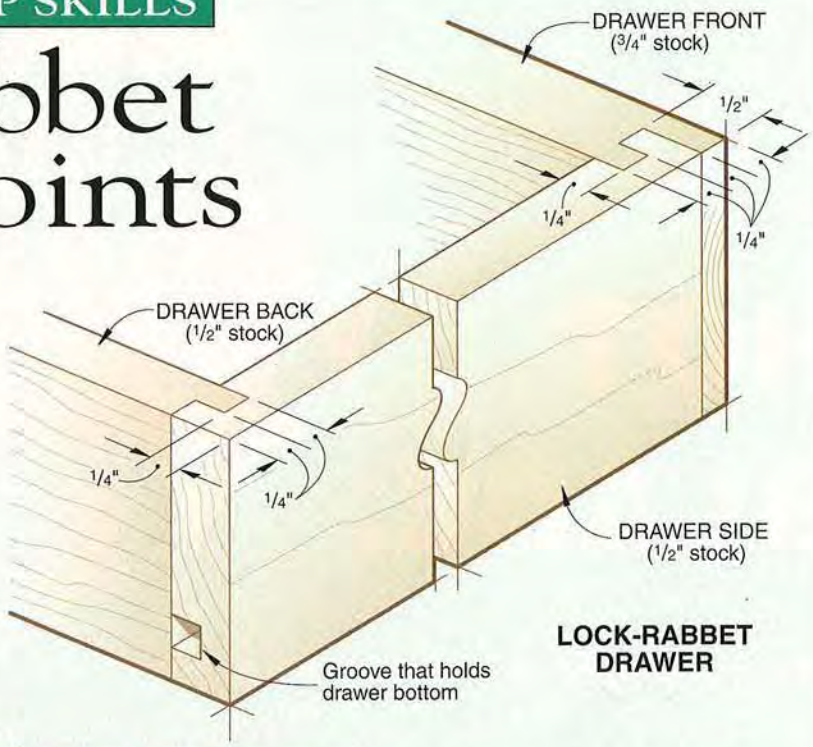

LOCK-RABBET DRAWER

Although you can build drawer joints using any number of methods, we think lock-rabbet joints like the ones *right* make sense for attaching the sides, fronts, and backs of most drawers. Although not as strong as a dovetailed joint, a well-made lock-rabbet joint will hold up fine unless the drawer takes heavy, regular pounding. And, it's much simpler to cut than dovetails.

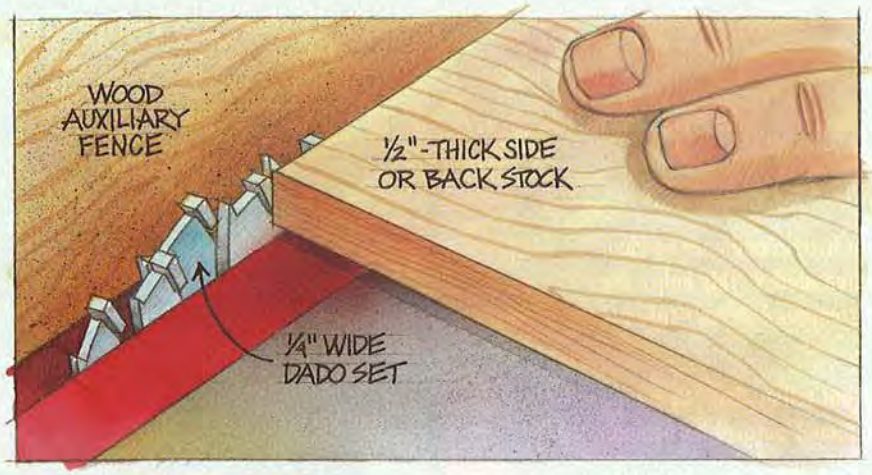

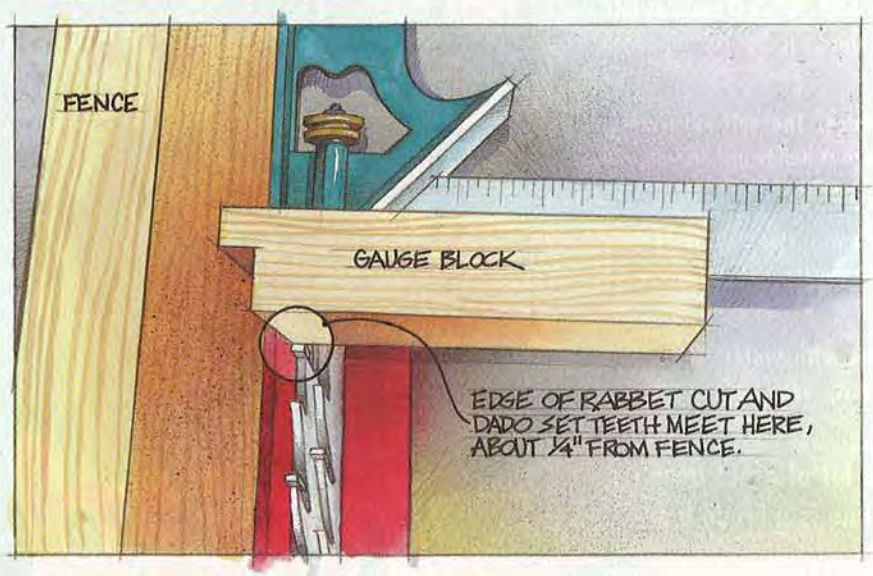

***Note:** Before you start, make sure that all of your drawer front stock is the same thickness (about ¾"). Also, your sides and backs should be identically thick (about ½").*

1 To protect the face of your tablesaw fence from blade cuts, attach a 6"-high wood auxiliary fence to it. Install a ¼"-wide dado set, and adjust the fence so the dado set just grazes it.

Use your ½"-thick stock for the drawer side or back to adjust the height of the dado set to match the thickness of that material as shown in *left top* illustration. Make a ¼×½" rabbet cut in a ¾×3×3" scrap "gauge block" positioned face down on your saw. Nestle your drawer side or back into the rabbet to double-check that the depth of the cut matches the thickness of the ½" stock. Save this gauge block.

2 Readjust the fence-to-dado set distance to match the width of the rabbet cut in the gauge block. As shown in *left bottom* illustration, the edge of the rabbet should meet the dado set teeth closest to the fence. Use a square to hold the gauge block 90° to the fence.

Continued on page 14

THE START OF A PERFECT FINISH.

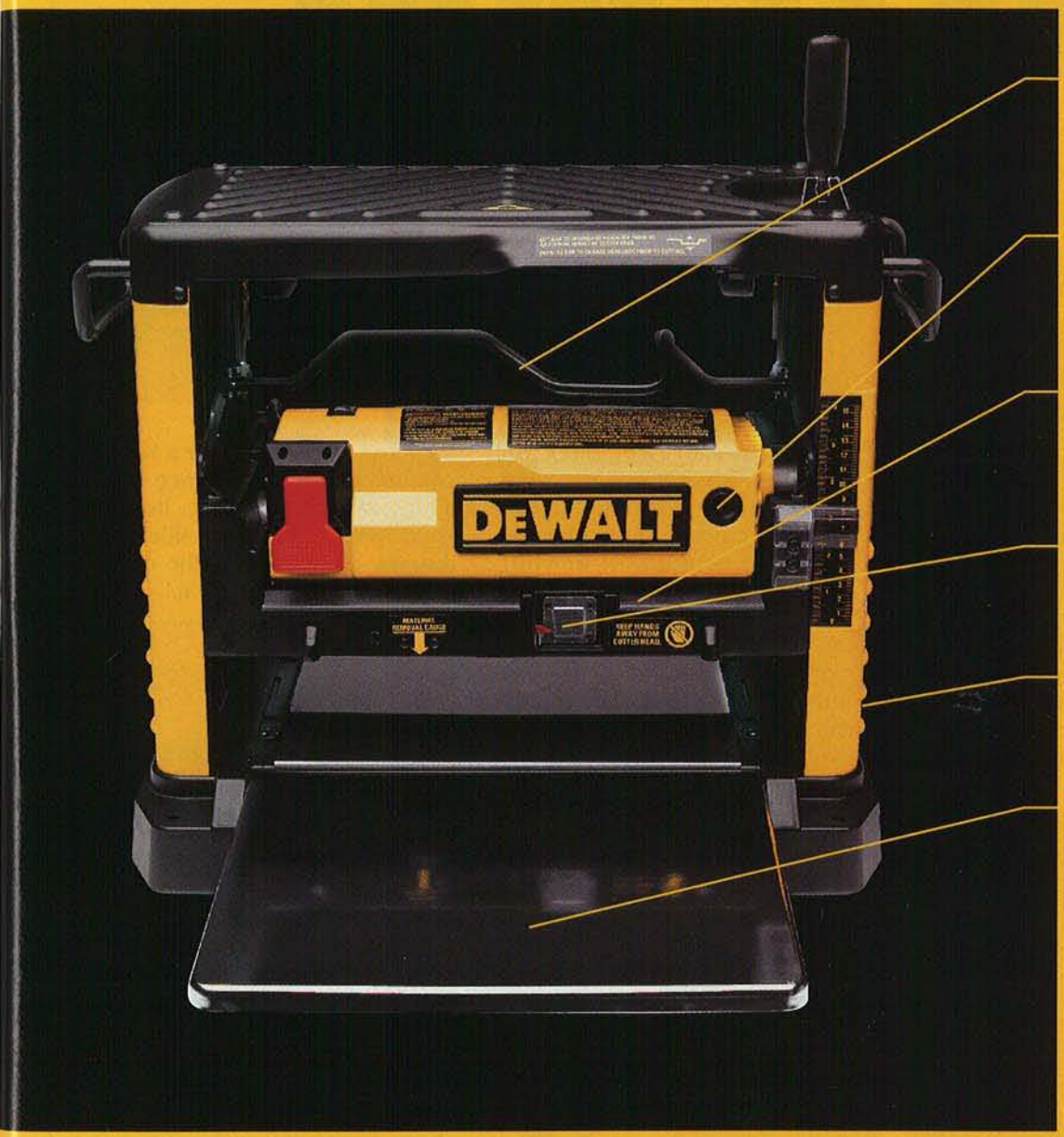

Four-column head lock secures the cutterhead against four steel posts, providing a snipe-free finish

Powerful 15 amp motor rotates the cutterhead at 10,000 rpm for 64 cuts per inch; 20% more than the competition

Includes an extra set of heavy-duty, M2 laminated high-speed tool steel knives that last up to six times longer

Material removal scale shows how much wood is being removed in a single pass

Adjustable turret depth stop allows user to return to frequently used thickness settings

Large infeed and outfeed tables provide 30% more material support than comparable units

The **DEWALT DW733 HEAVY-DUTY 12-1/2" PORTABLE THICKNESS PLANER** is the finest portable thickness planer on the market. It delivers extremely fine, snipe-free finishes over the entire length of the board. Of course, there's a lot more that makes this the best portable planer on the market, including a unique carriage head lock to aid stability, preventing movement and yielding a snipe-free finish. And the heavy-duty, M2 laminated high-speed tool steel knives last up to six times longer than other knives and can be re-sharpened. All in all, it's the best portable planer available anywhere.

For more information, call 1-800-4 DEWALT or visit our web site at www.dewalt.com.

DEWALT
High Performance Industrial Tools

Continued from page 12

3 Position a drawer front on edge with its back face against the fence. Now, cut ¼×½" grooves in both ends as shown *below*. Do this to all of your drawer fronts.

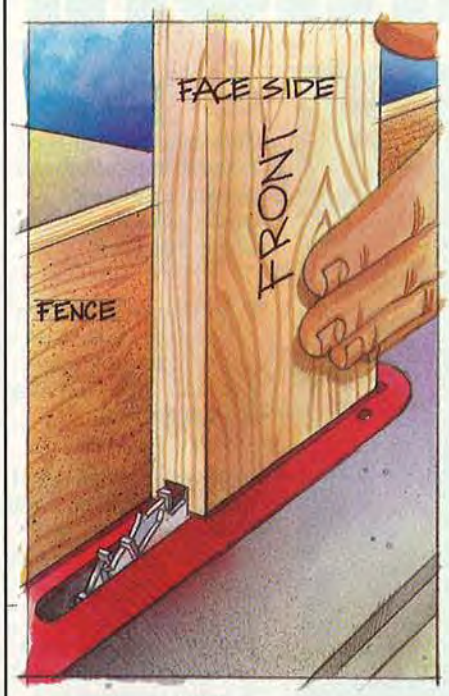

4 Once again, the gauge block helps you precisely set up for a cut. Position it as shown *below* to reset the height of the dado set to ¼" high. Do not change the position of the fence.

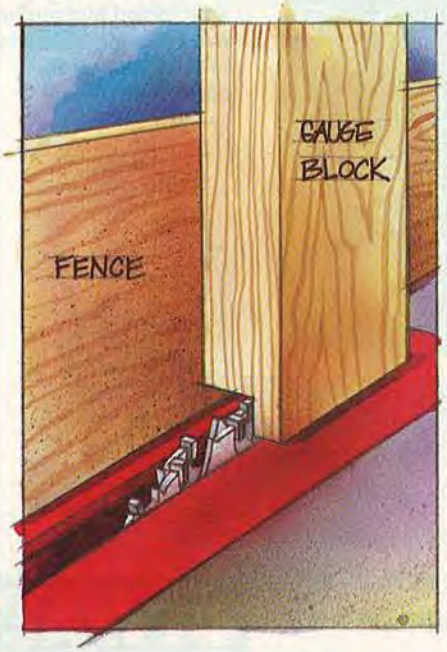

Note: *For each of the following steps, first make test cuts in scrap stock of the same thickness as your actual workpieces. Check the fit of the scrap pieces with the project pieces cut in earlier steps.*

5 Place a drawer side outside face up on the saw, butt either end against the fence, and cut a ¼×¼" groove as shown *below*. Groove the other end of the drawer side in the same fashion, and repeat these steps on your other drawer sides.

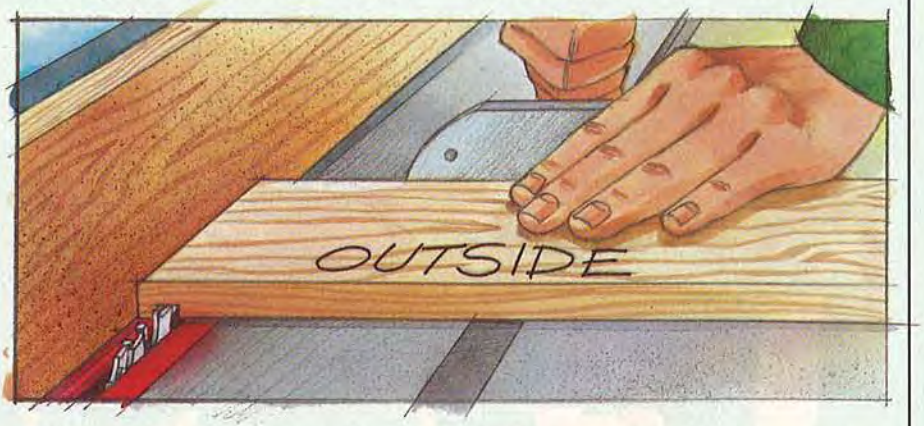

6 Position a drawer back on edge with its inside face against the fence. Cut a ¼×¼" rabbet in both ends as shown *below*. Make these cuts on all of your drawer backs.

Now's a good time to cut the ¼×¼" groove in each of your fronts, sides, and backs for holding the drawer bottom. Leave the fence and dado set where they are, position your drawer parts inside face down with their bottom edges against the fence, and cut the bottom-holding groove.

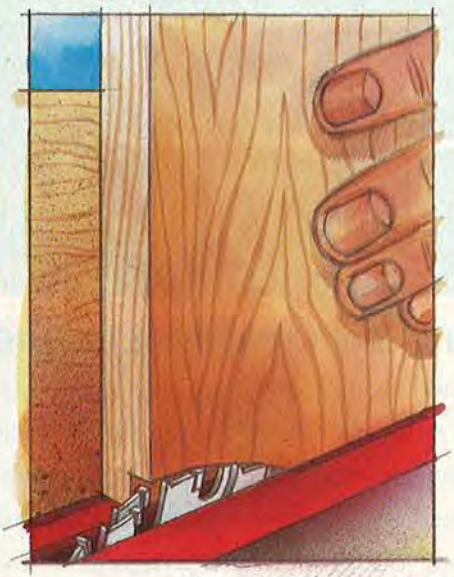

7 Raise the dado set for a ⅜"-deep cut. Readjust the fence so the dado set just grazes it. Position your drawer fronts face side up on the saw and complete the cuts on their ends as shown *below*.

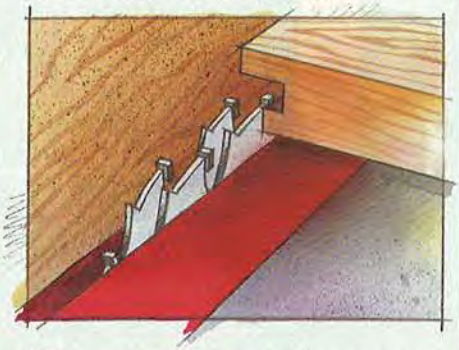

8 To assemble each drawer, first test-fit the parts. Then, apply glue to all of the grooves and rabbets. We suggest you make the bottoms from plywood instead of solid stock. In that way, you can glue the bottom in place without concern about expansion and contraction problems.

Assemble the glued parts, clamp them together, and measure diagonally from corner to corner to check for square. If one diagonal is longer than the other, place a long clamp along that diagonal to bring the drawer into square.

Written by Bill Krier with Jan Svec Illustrations: Kim Downing, Brian Jensen

SMOOTHER. QUIETER.

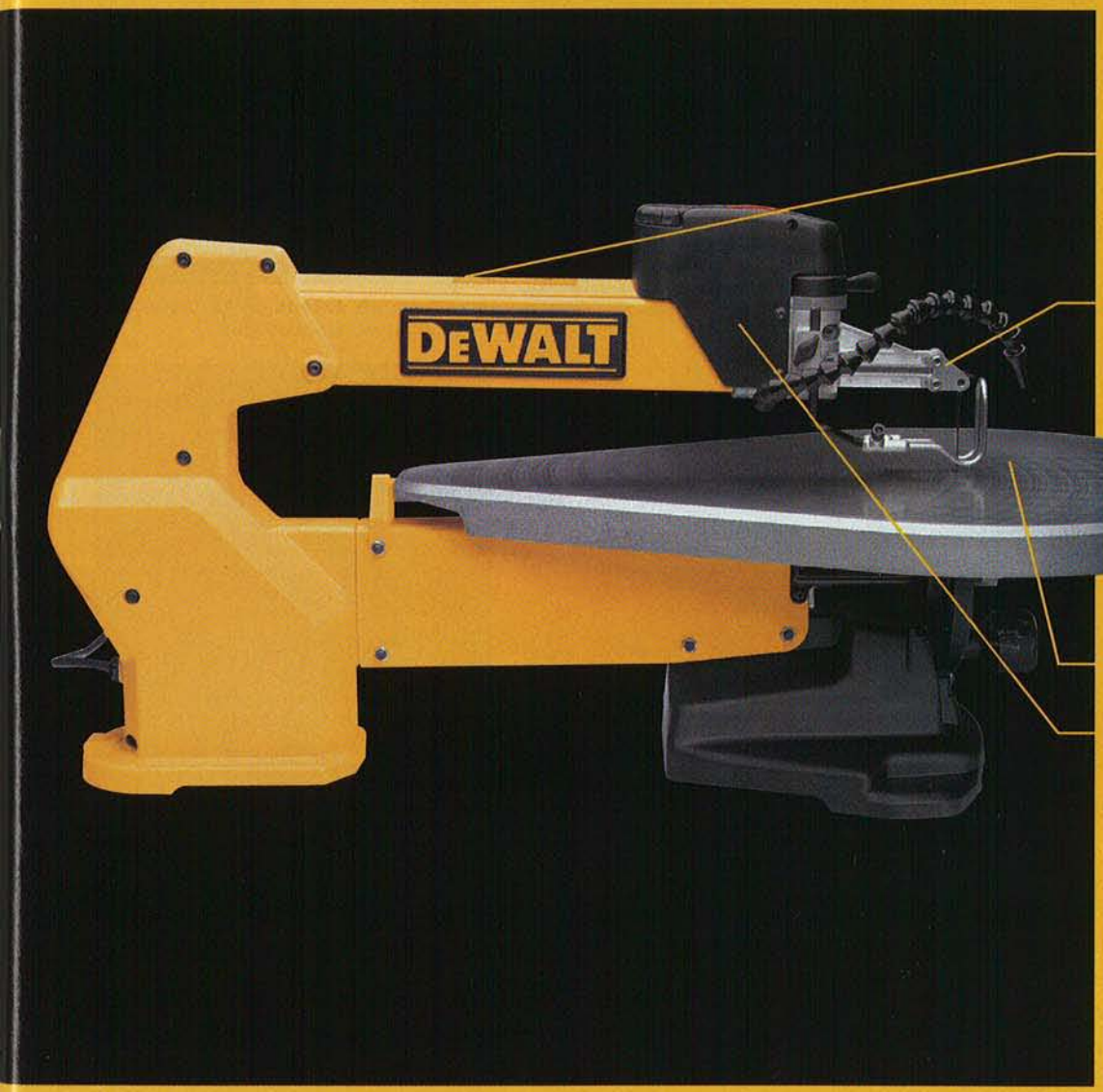

Double, parallel-link arm design dramatically reduces vibration and noise for extremely accurate cuts

Exclusive tool-free blade holders allow blade changes in seconds

Oversized, cast-iron table bevels to 45° left or right

On/off switch, electronic, variable-speed control, flexible dust blower and blade-tensioning lever are located on the front, upper arm for added convenience

The **DEWALT DW788 20" VARIABLE-SPEED SCROLL SAW** can take even the most complicated curves head-on. The double, parallel-link arm design cuts vibration dramatically, resulting in accurate cuts and less operator fatigue. A 20" throat and a depth capacity of 2" accommodates the largest of materials and the variable cutting speed easily adjusts for different materials. The oversized, cast-iron table provides superior material support and bevels to 45° left or right. Plus, DEWALT's tool-free blade change system means spending less time changing blades and more time making perfect cuts.

For more information, call 1-800-4 DEWALT or visit our web site at www.dewalt.com.

DEWALT
High Performance Industrial Tools

PNEUMATIC SANDERS
A Cushy Way to Smooth Curves

Screw on an extension to make the valve stem more accessible.

A hand bicycle pump will inflate the drum sufficiently in just a few strokes.

For sanding curves and contours, it's hard to beat a pneumatic sander. These inflatable sanding drums conform to curves, so you're a lot less likely to flatten a flowing form when you only want to smooth it. Use these tips to put a pneumatic drum sander to work in your shop.

You'll get pumped up for sanding with this drum

You'll probably spend in the neighborhood of $70–$80 on a pneumatic drum sander. When you buy the drum, you need to know whether you'll use it on your lathe or drill press. Most drums come with a mandrel for lathe-mounting; some require an adapter kit for drill-press use.

Before you inflate the sanding drum, slide the sanding sleeve onto it. (Replacement sleeves cost about $15 for five.) Inflate the drum until it feels firm, but not solid-drum hard. Later, you can bleed some air to fine-tune the firmness to the job at hand.

A valve-stem extension (available from an auto-parts store) makes inflation easier on some drums. We sliced about ⅛" off the bottom of the plastic extension so it would screw onto the stem and fit down into the hole around it, as shown *top*. After inflation, remove the valve extension, and cap the valve stem to keep sanding dust out.

A bicycle pump *above* works fine for inflating the drum—it only takes a few strokes. Beware of high-pressure air from your shop's air compressor; you might blow out the drum's air bladder.

Continued on page 20

Print this article

CANCEL CABLE.
Who needs 57 channels? We're talking the Ryobi BT3000 precision woodcutting system here. Sliding rails and movable tables. Self-aligning rip fence. 15-amp motor. Tons of optional accessories. Toss the TV? Nah. Build an entertainment center.
RYOBI
©1998 Ryobi America Corporation, 1424 Pearman Dairy Road, Anderson, SC 29625 1-800-525-2579 www.ryobi.com

It was the first Quad Cab™ ever. It offers the most powerful gasoline engine a full-size pickup can have. It is overall the most powerful line of pickups on the planet. It tows up to a maximum of 14,200 lbs. With up to 5,200 lbs. of available payload.† Let it reign, let it reign, let it reign.

1-800-4-A-DODGE or www.4adodge.com

†Depending on model. Always use seat belts. Remember a backseat is the safest place for children.

Continued from page 16

It's simple to set up your new pneumatic sander

You can install a pneumatic sanding drum between centers on a lathe as shown *right* or chuck it in a drill press as shown *opening page, left*. Drum installation is relatively easy, following the manufacturer's instructions.

A typical pneumatic sanding drum comes with a mandrel for lathe mounting. A fitting at one end features diametric kerfs to engage the lathe's two- or four-prong spur drive center.

For the tailstock end of the one shown (from Woodcraft Supply, 800/535-4486), the manufacturer suggests you cut off the tenon on the nylon fitting supplied for the tailstock end, and support the drum end with a rotating tail center. For surer centering of the drum, we turned a simple tailstock fixture to receive the fitting's ⅜"-diameter tenon, shown in the photo *above right* and the Tailstock Bearing drawing. (For continuous or heavy use, using the rotating tail center would be better.)

For drill-press mounting, chuck the tenon on the drum's top fitting into the drill-press. To keep the drum running true, be sure to clamp the bottom support fixture supplied with the drum firmly to the drill-press table. (For our drum, we drilled a hole to receive the drum-end pin in a piece of scrapwood large enough to clamp at both ends, shown *right*.)

Now, you're ready for some contour sanding

Run the drill press or lathe at 1,200 to 1,400 rpm for sanding with a pneumatic drum. The soft surface can make the drum grabby, so hold the work firmly.

Sand on the lower front quadrant of a lathe-mounted drum. And remove the lathe's tool rest for sanding; don't try to brace the workpiece against it.

For lathe-mounting the drum, we turned a wooden bearing to fit into the tailstock

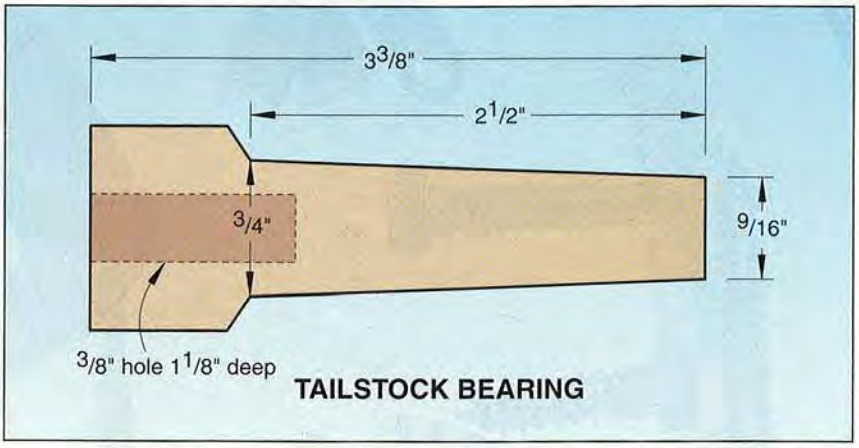

TAILSTOCK BEARING

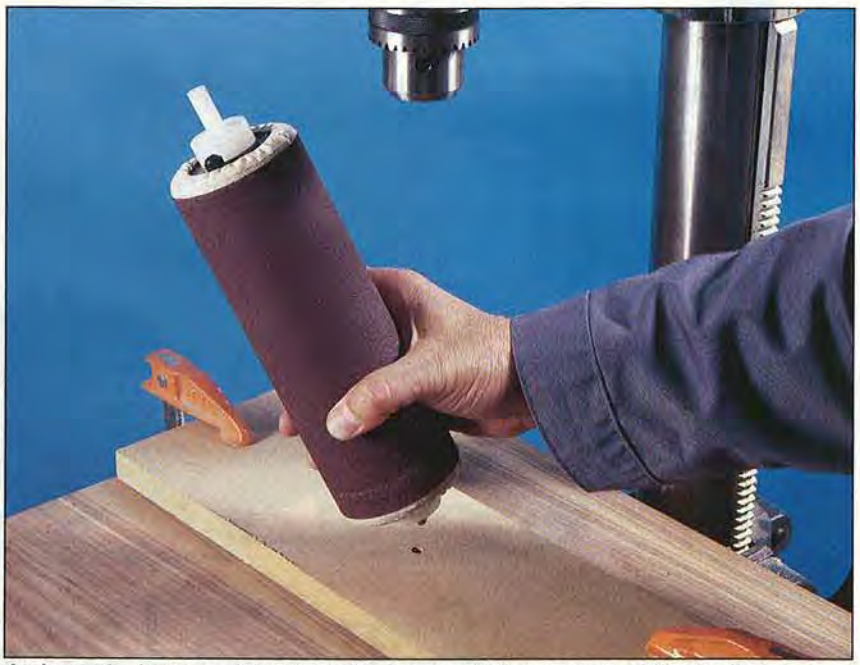

A pin on the bottom of the drum fits into a hole for support while sanding.

Photographs: Hetherington Photography Illustration: Roxanne LeMoine

THE BEST TOOL IN THE JOINT.

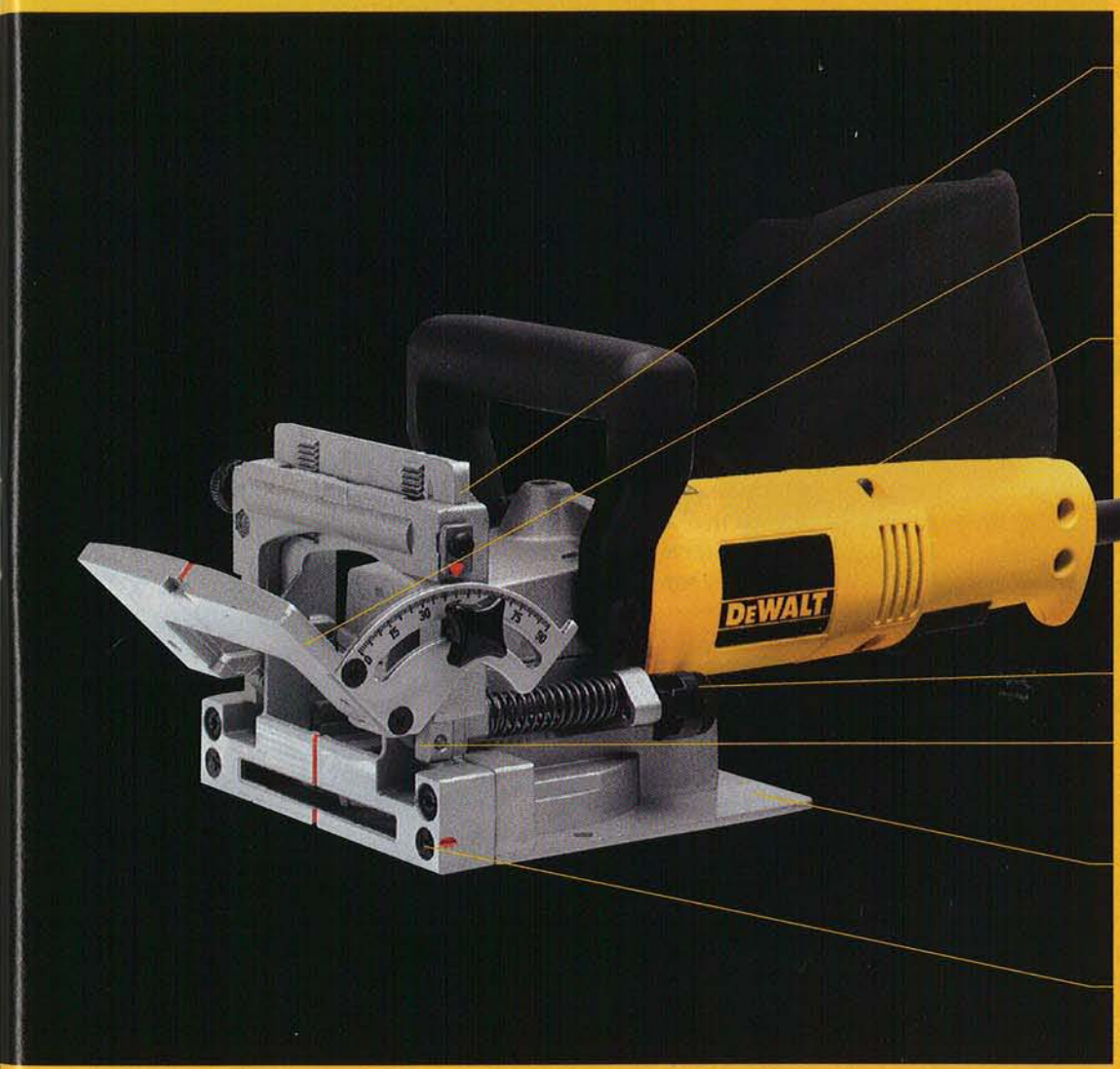

Dual rack-and-pinion fence ensures blade and fence are always parallel, for accurate joints every time

Integral, one-piece fence is adjustable and tilts from 0° to 90° requiring no extra parts

6.5 amp, 10,000 rpm motor provides power for the hardest woods

Preset depth stops for all common biscuit sizes

45° locating notch in fence allows indexing off the outside surface of a mitered joint

Non-marring, heavy-duty aluminum shoe allows joiner to be clamped for stationary work

Retractable, anti-slip pins help hold work in place

Only the **DEWALT DW682K HEAVY-DUTY PLATE JOINER** makes it easy to construct a variety of accurate joints. The dual rack-and-pinion fence control guarantees precise vertical adjustments and precise fence alignments. And, for making cuts at any angle, the integral, adjustable fence tilts from 0° to 90°, then locks in place for unparalleled accuracy. Flush cuts can be made at 0° without removing the fence. Together, these advances ensure accurate joints every time. The DEWALT plate joiner also is easy to use and control, thanks in part to the ergonomically designed barrel grip and the extra-wide paddle switch. Because it's so versatile, it can be positioned on the inside or the outside face of a mitered joint. For precision that can't be beat, choose DEWALT. It's built into every one of our plate joiners. Guaranteed Tough.™

For more information, call 1-800-4 DEWALT or visit our web site at www.dewalt.com.

DEWALT®
High Performance Industrial Tools

WITH A ROUTER, YOU NEED DIRECTION

If you constantly wonder which way to feed your router into a workpiece, you better read this.

You know the rule when cutting stock on your tablesaw: "Always feed against the rotation of the blade." The same usually applies to your router, but it's not always clear which way that is. When edge routing, it's easy to see which way the router bit spins so that you can feed against its rotation. But what about routing a groove in the middle of a board? Or edge cuts in the middle of a workpiece? Then, even though the rule applies, it's not always easy to remember. Here are some simple guidelines to help you know which way to feed your router for any task.

Make a groove in the right direction

Routing a groove (a with-the-grain cut in the middle of a board or piece of plywood) in the wrong direction can be dangerous. The cutting action of the bit could pull the router out of control. And there's nowhere to hide when it happens—it's just too quick.

But here's an easy way to remember which way to feed for a groove. Looking down at the top of a handheld router, the bit rotates clockwise, as shown in the drawing *below left.* With the router's edge guide fixed in position at 6 o'clock, feed toward 3 o'clock. The cutting action of the bit will try to move the router toward 12 o'clock. But this same action pulls the guide against the board, keeping the groove parallel to the edge of the board. If you rout grooves with a straightedge instead of an edge guide, clamp it to the workpiece at 12 o'clock. The router will run parallel to it for the very same reason.

Figuring out inside and outside edges

Routing outside edges and edges on the cutout in the middle of a workpiece isn't all that different from routing straight cuts. Imagine that the workpiece is a piece of toast with the buttered middle gone, as shown in the drawing, *below right.* Going around the workpiece on the outside, you feed your router counterclockwise. For the inside edge, feed the router clockwise.

Simple router-table safety

Featherboards add safety as well as accuracy when you rip on a tablesaw. Yet, they should be standard on your router table, too. So is a pushstick. That's because the router table enables you to do things you can't do with a handheld router. But it also places your fingers nearer to the whirling bit, which you are normally feeding from the right side of the table. A featherboard and pushstick solve the problem by keeping the work firmly against the fence and table for a clean and safely done cut.

Photographer: Hetherington Photography
Drawings: Roxanne LeMoine

"Where Safety Begins" is written by Mike Gililland, a lifelong woodworker and an engineer with 25 years' experience designing and working with power tools to make them safer. He owns and runs a safety consulting firm.

Have a safety question? Send it with an SASE to: The Safety Man, *WOOD*® Magazine, 1716 Locust St., GA310, Des Moines, IA 50309-3023. Not all questions received will be published, but all will receive an answer from the Safety Man.

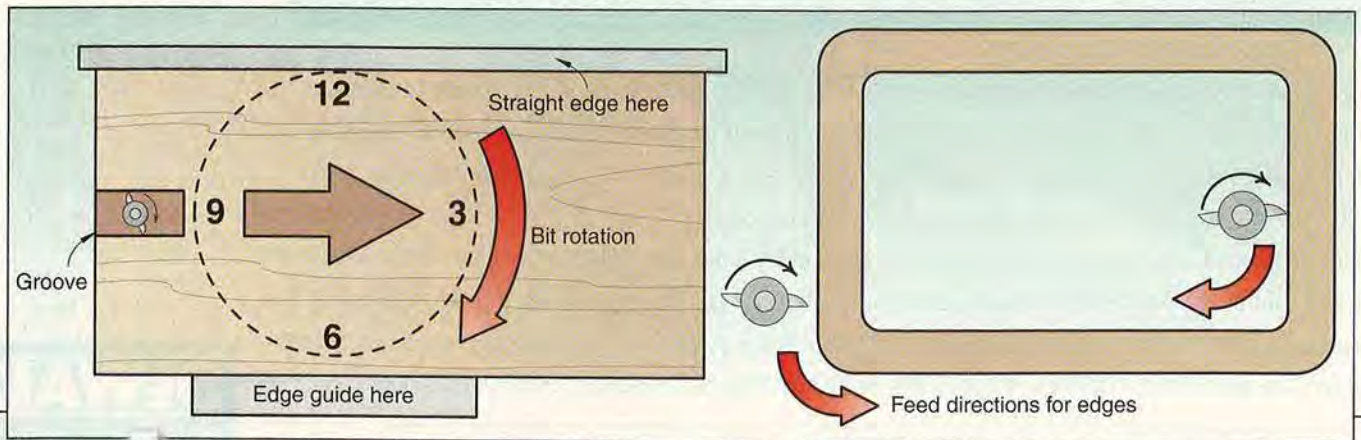

Print this article

THE FASTEST FINEST FINISH.

DW411

Heavy-Duty 1/4 Sheet
Palm Grip Sander

DW423

Heavy-Duty 5" Random Orbit Sander
With Electronic Variable Speed

DW431

Heavy-Duty 3" X 21" Electronic
Variable Speed Belt Sander

DW421

Heavy-Duty 5" Random Orbit Sander

Dust-sealed switch provides increased durability

2.0 amp motor operates at 12,000 opm, providing maximum sanding speed for smooth finishes

Sealed, 100% ball-bearing construction delivers longer life

Dual-plane, counter-balanced fan reduces vibration and user fatigue

3/32 orbit diameter provides a tight orbital pattern for smooth finishes

The Controlled Finishing System™ maintains a controllable pad speed and minimizes gouging during startup

The family of **DEWALT HEAVY-DUTY SANDERS** was designed to produce the fastest, finest finishes possible, on all kinds of materials. Take the DW421 Heavy-Duty 5" Random Orbit Sander, which features the DEWALT-exclusive Controlled Finishing System™ to maintain pad speed and virtually eliminate gouging. Its 2 amp motor provides maximum sanding speed while being extremely comfortable to use. And, features like the dust-sealed switch contribute to longer tool life. If greater control is needed, there's the DW423 electronic, variable-speed sander. It has many of the same features, along with speeds that can be varied from 7,000 to 12,000 opm. For fine finishes, the DW411 orbital sander has a 2 amp motor and moves at 13,500 opm. And, for fast material removal, there's the DW431 belt sander. Its compact, light-weight design permits use in tight spaces or on vertical surfaces. So choose the best sander for the job. Choose DEWALT. Guaranteed Tough.™

For more information, call 1-800-4 DEWALT or visit our web site at www.dewalt.com.

DEWALT
High Performance Industrial Tools

The woodworking tree of knowledge

Across

4 This Danish belongs in your finishing area, not your kitchen.

7 To crosscut lots of pieces to the same length, you might attach this to your miter-gauge fence.

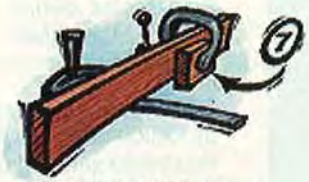

9 This kind of bit bores flat-bottomed holes.

14 Stock too thick? This machine thins it.

16 A dye family useful for coloring wood.

17 A popular softwood for country furniture.

18 Many woodworkers consider this the essential shop tool.

20 To saw lumber with the grain.

21 A strip that divides glass panes in a door or window.

22 What is this part of a chisel called?

23 What is the name for the interlocking part of a box joint, shown *below*?

25 To lay a decorative strip or feature into a routed recess.

Down

1 A flat, thin part of a chair's back.

2 A style of carving, and also a woodworking by-product.

3 A tree outgrowth prized for veneers and woodturnings.

5 Lauan usually goes by this name; the real stuff is a classic furniture wood.

6 If you fret a lot, you'll want one of these.

8 Figure characterized by numerous round spots; often associated with maple.

10 You could rout around this master with a guide bushing.

11 Thin wood, sometimes highly figured or rare, glued to a substrate.

12 Name the cut that runs across the grain in the illustration *below*.

13 You could put honey on this, but you'll get a better joint with glue.

15 A coarse file for shaping wood.

19 A strip that fits into slots to reinforce a joint.

22 A distinctive pattern or design in woodgrain.

24 What's the name for the cut that runs along the edge of the board *below*?

ANSWERS:

ACROSS:
4. OIL
7. STOPBLOCK
9. FORSTNER
14. PLANER
16. ANILINE
17. PINE
18. TABLESAW
20. RIP
21. MUNTIN
22. FERRULE
23. FINGER
25. INLAY

DOWN:
1. SPLAT
2. CHIP
3. BURL
5. MAHOGANY
6. SCROLLSAW
8. BIRDSEYE
10. TEMPLATE
11. VENEER
12. DADO
13. BISCUIT
15. RASP
19. SPLINE
22. FIGURE
24. RABBET

Print this article

THE PERFECT EDGE.

DW625
Heavy-Duty 3 HP
VS Electronic Plunge Router

DW610
Heavy-Duty 1-1/2 HP Router

DW621
Heavy-Duty 2 HP
Electronic Plunge Router

- Exclusive, built-in dust-extraction column attaches to standard shop vacuum to remove 95% of dust
- 8' rubber cordset
- 100% ball-bearing construction
- 2 HP motor provides the power to make the most challenging cuts
- Electronic, variable-speed motor runs at 8,000-24,000 rpm with constant speed under load to ensure a quality finish in all materials
- Innovative, rubber-coated knobs have plunge-lock and on/off switch built in for maximum control
- Rack-and-pinion, micro-fine depth adjuster provides fast and accurate depth settings
- Spindle lock button allows one-wrench bit changes
- 1/4"-1/2" collet capacity for greater versatility
- Converts from a fixed-base to a plunge router without extra parts or tools
- Precision-machined, 3-position turret stop

The family of **DEWALT HEAVY-DUTY ROUTERS** is the industry standard. These routers provide the highest degrees of accuracy, durability and power you can buy, along with the most innovative features available. For example, the DW621 includes the industry's only built-in dust-collection system. It also can convert from a fixed-base to a plunge router without additional parts or tools. And, its 2-horsepower motor provides the power needed to cut a variety of materials. The DEWALT line also includes the DW625, which boasts 15 amps and a 3-horsepower motor. And our fixed-base router, the DW610, was a 1998 *Wood Magazine* Editors' Choice. So get the best of all worlds, and get a DEWALT heavy-duty router. Guaranteed Tough.™

For more information, call 1-800-4 DEWALT or visit our web site at www.dewalt.com.

DEWALT®
High Performance Industrial Tools

$5.00 Instant Rebate on Most Items Listed!* FREE FREIGHT!

Offer Expires 12-20-98 *Call for Details.

1945–1995 50 Years

JDS COMPANY

750J Air Filtration System $259

8-12 air filtration system 489
10-16 air filtration system 689
18-34 accu miter gauge 149

PERFORMAX PRODUCTS, INC.

16-32 Plus 16" - 32" Bench Drum Sander $899 (Optional Stand)

ProMax III stationary sander 1799
SuperMax-25 25"dul dr sndr 3299
SuperMax37x2 37"dul dr sndr3999

DELTA

22-560K 12-1/2" Portable Planer $329 (Includes Extra Knives & Dust Hood)

22-540 12"prtbl plnr, xtra knvs 269
31-780 os c. spindle sander 194
36-250 10" sliding comp. 469
28-190 12" bandsaw w/stand 399
11-990 12" bench drill press 189
14-650 mortising machine 249

37-070K 6" VS Bench Jointer $259 (Includes extra knives)

40-540 16" vs scroll saw 179
31-460 4x36 belt/disc sander 119
36-540 10" bench saw 179

David White

LP6-20 20X Sight Level Package $219

LP6-20XL New sight level pkg. 279
ALTP6-90018 auto lvl trnst pkg 539
LTP6-900 level transit pkg. 399
LT8-300 26 x transit 499
LT8-300P 26 x opt. transit 599

POWERMATIC

1660760 66 Saw 3 HP w/50" Accu-Fence $1999 ($100 Savings Bond)

1660802 3hp 66saw w/30' fnc1799
1791227 64 Artisan sw w/Acc. 749
1791208 osc. spndle sander 299
1791209 New 15" planer1199
1791051 6" jointer with stand 499
1791070 1-1/2 hp dust coll 399

Jem

MSXE-636-2 VS Triangular Oscillating Sander w/Case & Paper $174

9-55-13 turbo II vacuum 249

freud

FT-2000E 3.25 HP VS Router $184

JS102 plate jner cs &adj fnc 124
TR215 8-1/2" slide saw 249

SKIL

HD77M Magnum 77 7-1/4 Worm Drive Saw $169 (2 Lbs. Lighter)

Wap

60113 Turbo Vacuum $499

JET EQUIPMENT & TOOLS

JTAS-10X50W 10" White Saw 3 HP w/50"Xacta Fence & Motor Cover Includes Table & Legs $1299*

JPM-13 13" planer/moulder 749*
JWTS-10JF 10" saw w/Jet fnc 499*
JWBS-14CS 14"1hp wd bdsw 544*
JJ-6CSXW 6" long bed jointer 469*
JWP-15CS 15"3hp w planer1099*
DC-650 1hp 650cfm dust col. 204*
DC-1200 2 hp dust collector 359*
*Price after mail-in rebate

HITACHI

C8FB2K 8-1/2" Compound Mitre Saw $469 (Includes 60T Blade)

C10FS 10" slide compound 599
P12RA 12" planer/6" jointer 999
C10FC 10" cmpnd mitre saw 199
M12V 3-1/4 hp vs pl. router 189
C10RA 10" table saw w/stand 299
P20SB 3-1/4" planer 99
NT65AA 16 ga finish nailer 349
NR83A full head nailer 379
NR83AA clipped head nailer 329
NV45AB coil roofing nailer 379
EC12 2hp twin tk comp 269
CB75F resaw/bandsaw 2399

BOSCH

1584AVSK VS Top Handle Jig Saw w/Case $154

1584VSK barrel jigsaw w/case 164
B3915 10"slide compound saw 499
3615K-GL 14.4 volt drill kit 179

1617EVS 2 HP VS Router $189

11224VSR7/8" Bldg sds r hmr 219
11304 Brute breaker hammer 1249
1194VSRK 1/2"vsr ham dr kit 159
1276DVS 4x24 vs belt sander 229
1274DVS 3x21 vs sndr w/bag 169
1618B 1-3/4hp D-hdl router 179

Panasonic

EY6100FQKW 12 V 3/8" Drill Kit w/2 Batteries $174

EY6230FQKW15.6v 1/2"drl kt 199

HONDA Power Equipment

EB2500XK1A 2500 Watt Construction Generator $1029

EB3500XK1A 3500 w gen 1499
EB5000XK1A 5000 w gen 1879
EB6500SXA 6500 w gen 2479

EX1000A 1000 Watt Generator $659

EM3500SXK1A 3500 elec strt 1629
EM5000SXK1A 5000 elec strt 1999
ES6500K1A 6500 electric strt 2679

For optimum safety & performance we recommend you read the owner's manual before operating your Honda Power Equipment. Connection of generators to house power requires transfer device to avoid possible injury to power company personnel. Consult a qualified electrician.

Emglo

AM78-HC4V 1-1/2 HP Vertical Twin Tank $314

M79-HC4V New 1-1/2hp vert 339

Milwaukee

6527-21 Variable Speed Super Sawzall $169

5377-6 1/2"kylss hmmr drill kt 199
5371-6 1/2" hammer drill kit 189

6496-6K 10" Slide Compound Saw $579 (Includes Tool Stand)

6497-6K 10" cmpd saw w/acc. 659
5397-6 3/8" hammer drill kit 144
0234-6 1/2"vsr 0-850 mag. 129
6368 7-14" saw w/ct bld, cs, fn149

STANLEY BOSTITCH

N60FN-2 Kit 1-1/4" - 2-1/2" Finish Nailer $279

N80S-1 16d stick nailer 329
N80C-1 New coil nailer 329
BT50-Kit 1-3/16"-2"brd nlr kit 189
532SX-Kit finish stapler kit 139
RN45B-1 New roofing nailer 369
MIIIFS floor stapler 549

BIESEMEYER

A DELTA COMPANY

78-900 50" Commercial w/12" Left $329

78-90730" commercial fence 299
78-934 52" homeshop fence 279
78-931 40" homeshop fence 259
78-930 28" homeshop fence 249

SENCO

SFN40K 1-1/2 - 2-1/2 Finish Nailer $319

SFN-1 Plus 1"-2" finish nailer 269
SLP-20 5/8"-1-5/8" brd nail kt 199
SLS20 finish stapler w/cs 249

Accuset by SENCO

A125BN 18 Gauge 1-1/4" Brad Nailer $99

A200BN 18ga 2" brad nailer 134
A150LS1-1/2" finish stapler kit 144
A100LS 1" finish stapler kit 114
A250FN 15ga 2-1/2" fin nlr kit 239

Occidental Leather

5080 Pro Framer Tool Belt $139

8080 oxy light pro framer 129

DELTA

36-800 3 HP White Unisaw w/50" Biesemeyer $1599*

36-920 3hp wht uni w/unifnc1599*
36-820 3hp unisw w/52" uni 1499*
36-820L unisaw 3hp left tilt 1499*
36-821L unisaw 3hp left tilt 1499*
36-830 3hp unisww/30"unif 1399*
36-821 3hp unisw w/50"Bies1499*
36-831 3hp unisw w/26"Bies1399*

36-455 10"Cont. Saw w/30" Unifence $819*

36-460 10" cont saw 28" Bies779*
36-470 10" cont saw 40" Bies799*
36-480 10" cont saw 52" Bies829*
36-444 10" contractor saw 599

28-270 14" 1 HP Bandsaw Includes Mobile Base, Fence, Cool Blocks $799*

28-275 14" 3/4 hp bandsaw 549*
17-900 16-1/2"floor drill press 329
23-710 shaprening center 159
43-379 3hp hd 2 spd shaper1349
36-220 10" cmpnd mitre saw 209
37-350A 8" long bed jointer 1399*

22-675Y 15" Planer w/Stand & Ext. $1069* (Includes Stand & Extensions)

37-190 6" jointer w/stand399*
31-280 sanding center w/stnd749*
40-650 18" vs scroll saw 399
50-840 1hp 650cfm collector 224
50-850 1-1/2hp 1200cfm clctr 299
50-851 2hp 1500cfm collector 499
50-853 3hp 2100cfm collector 699
50-860 New air cleaner 249
*Price After Mail-In Rebate

MK®

MK 660 3/4 HP Tile Saw $599

CALCULATED INDUSTRIES INC.

4045 Construction Master IV Calculator $69

PORTER+CABLE The Woodworker's Choice

9444VS VS Profile Kit $119

333 5" Quicksand dstls sander 65
334 5" dustless PSA sander 65
97355 5" vs sander w/case 145
97366 6" vs sander w/case 149

DA250A 1"-2-1/2" Finish Nailer Kit $219

CDA250 Bammer 15 ga fin nlr 279
CFN250 Bammer 16 ga fin nlr 279
CMS200 Bammer 16ga 2" stplr279
FN250A 16g 2-1/2" fnsh nail kt 184
BN200 18g 2" finish nail kit 129
BN125 18g1-1/4" finish nail kit 89
NS100 18g1/4" crown stplr kit 94
NS150 18ga 1-1/2"finish stplr 139
FC350 2 - 3-1/2" clip hd nailer 289
FR350 2 - 3-1/2" full hd nailer 289
RN175 coil roof nailer 299
CF2400 2 hp oil free comp 329

9352VS 3x21 VS Belt Sander $189 (Includes Case)

7810 tool triggered vacuum 269
556 plate jointer w/cs & fnc 139
360VS 3x24 vs belt sander 229
362VS 4x24 vs belt sander 239
9862 12v 3/8" dr kit w/2 bat 159
9872 14.4v dr kit w/2 bat 184
743-K 7-1/4"15 amp saw w/cs 129

557 Plate Joiner With Case $199

693PK 1-1/2hp plnge router kit 199
97310 lamintate trimmer kit 189
7539 3-1/4 hp 5 spd plng rtr 289
9690 1-1/2hp router w/cs 164
691 1-1/2 hp D handle router 169
697 router table w/router 234
7518 3-1/4 hp 5 speed router 289
7403 paint remover 189

9737P Quick Change Tiger Saw Kit $159

7499 cut-out tool 69
9543 top hndl jigsaw w/case 169
7800P drywall sander 339
6931 plunge router base 84

FUJI

HVLP-SUPER High Volume Low Pressure 3-Stage Sprayer $599

DEWALT High Performance Industrial Tools

DW708K 12"Sliding Dual Compound Miter Saw $649 (Includes Dust Bag)

DW744 10"portable table saw 499
DW733K 12-1/2" port plnr 399
DW788 20" vs scroll saw 399
DW938K 18V recip saw kit 269
DW937K 14.4v recip saw kit 249

DW995KS-2 18 Volt Contractors Combo Kit $389

DW936K 18 v crdls saw kit 249
DW935K 14.4 cdls saw kit 229
DW621K 2hp vs plng router 199
DW625 3hp vs plunge router 289
DW673K laminate trimmer kit 189

DW321KK VS Jigsaw With Case $164

DW705 12" cmpnd mitr saw 349
DW364 7-1/4" saw w/brake 159
DW677K 3-1/8"planer w/case 154

DW682K Plate Jointer Kit $159

DW421K 5"h&l rand sndr w/cs 74
DW423K5"vs rndm snder w/cs 89
DW443 6" RA H&L rdm sndr 139
DW431 3"x21"vs belt sander 189

DW995K-2 18 Volt 1/2" 2 Batteries VSR Drill Kit $259

DW991K-2K 14.4v3/8"dv/dr k 209
DW991KS-214.4v drill/saw kt 349
DW991KC-214.4 v dr/recip kit379
DW995KC-2 18v dr/recip kit 399
DW997KC-2 18v hm dr/recp k419

makita

2708-W 8-1/4" Tablesaw $279

6233DWAE 14.4v drill w/2 bat. 199
5007NBK 7-1/4" saw w/case 129
3612C 3 hp plunge router 279

LS1011 10" Compound Mitre Saw $399 (Includes 50T CT Blade)

LS1013 10" dual slide 499
LS1211 12" cmpnd miter saw 599
9820-2 blade sharpener 229
N1900B 3-1/4" planer w/case 139
3901 plate joiner 159

STABILA

24670K 4' Level w/Hand Holes $59 (Includes Case)

24640K 2' level w/hand holes 49
24680K 6' level w/hand holes 109
27000K 78" lvl wo/hand holes 119

TORMEK

2004T Sharpening System $389

TOOL CRIB
OF THE NORTH

PRICE GUARANTEE

DW733K
12 1/2" Portable Thickness Planer
$399

FREE Knives & Hood

DW708K
12" Double Bevel Sliding Compound Miter Saw
FREE DUST BAG
$649

DW682K
Plate Joiner Kit
FREE KIT BOX

$159

DW744
10" Portable Table Saw
$499

DW788
20" Variable Speed Scroll Saw
$399
DW788S (With Stand) - $469

DEWALT

DW421K
5" Random Orbit Palm Sander

FREE KIT BOX
$74

DW321KK
Heavy Duty Top Handle Jig Saw

FREE KIT BOX
$164
25 EXTRA BLADES

DW677KK
Heavy Duty (3-1/8") Planer
FREE KIT BOX

$159

DW705
12" Compound Miter Saw

$349

DW423K
5" Random Orbit Sander with Electronic VS

FREE KIT BOX
$89

DW610K
1 1/2 HP Router
FREE KIT BOX

$149

DW621K
2HP VS Electronic Plunge Router
Fine Height Adjuster

FREE KIT BOX
$199

DW625
3HP VS Electronic Plunge Router

$289

DW431
3" x 21" VS Electronic Belt Sander

$189

DW965K
12V 3/8" Right Angle Drill / Driver
FREE KIT BOX

$189
DW966K - 14.4 Volt - $199

DW4PAK-2K **$569**

FREE DW9032 HOLSTER

DW991K-2K
14.4V 3/8" Adjustable Clutch Drill/ Driver Kit
FREE DW1153 DRILL BIT SET

FREE KIT BOX
$209

Hours: M-F 7:00-9:00 CST
Saturday 8:00-5:00 CST

To Order or for Technical Support, call Toll Free (US or Canada)

1-800-358-3096

Mention Discount Code #71-128

WOOD, Dec. '98

FAX US YOUR ORDER! 1-800-343-4205 • CATALOG REQUESTS! 1-800-582-6704
Visit Our Web Site at http://www.toolcribofthenorth.com

Box 14040•Grand Forks ND•58208-4040

Any comparable National ad in this issue. We reserve the right to verify competitors price and stock. Limited to stock on hand.

•• FULL LINE DISTRIBUTOR •• FREE FREIGHT IN 48 CONTIGUOUS USA •• FACTORY AUTHORIZED SERVICE •• ERRORS AND PRICES SUBJECT TO CHANGE ••

Hole-in-none CIRCLE JIG

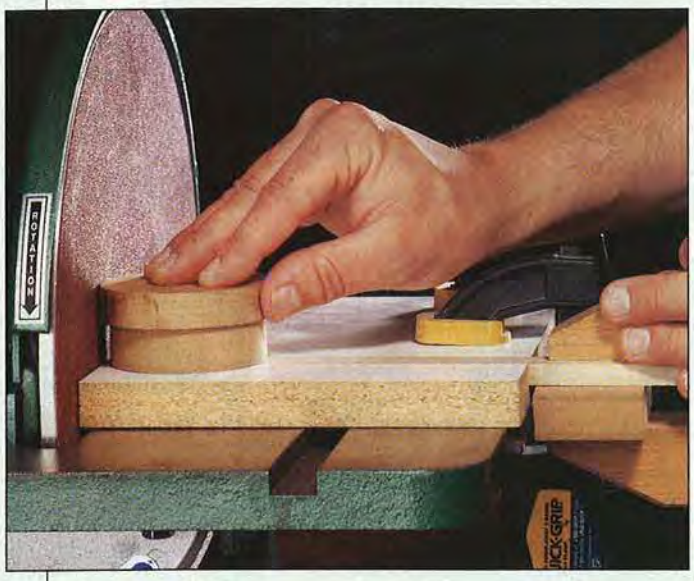

Making perfectly round wood discs in a world of straight, flat saw blades isn't as difficult as it sounds. Holesaws and circle cutters excel at cutting discs with center holes. And that's great if you're making wheels for toys. But, what if you want perfect circles *without* center holes, say for making a set of drink coasters? *WOOD*® magazine Assistant Design Editor/Project Builder Jan Svec came up with the jig shown *at left* that does just that.

Start by clamping the base to your disc-sander table. Position the sliding bar so that the distance from the nail to the sanding disc equals the radius of the circle that you want to make (see the drawing *below*). Lock this measurement in by clamping a stopblock on the underside of the slide bar, as shown *below left*.

On a piece of scrapwood, lay out a circle ¼" larger in diameter than the disc you want. (Use a compass for the layout—you'll want a center mark on this piece.) Rough-cut this circle on your bandsaw. With a clipped-off #17×¾" wire nail, drill a hole in the center of the disc and slip the disc over the nail on the sliding bar. Sand this scrapwood disc to the size of your finished disc by rotating and feeding it into the sanding disc until the stopblock contacts the jig's base.

Using this scrapwood disc as a model, lay out a slightly oversize circle on your workpiece, and rough-cut it. Now attach your workpiece to the top of the model disc using cloth-backed, double-face carpet tape. Sand this piece the same way you sanded the model disc. You can reuse the model disc to make as many discs as you like.

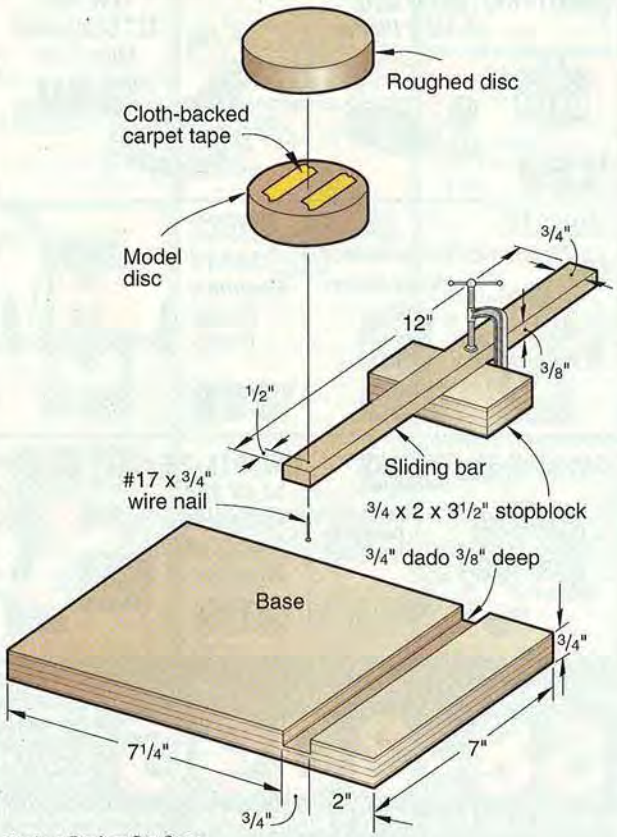

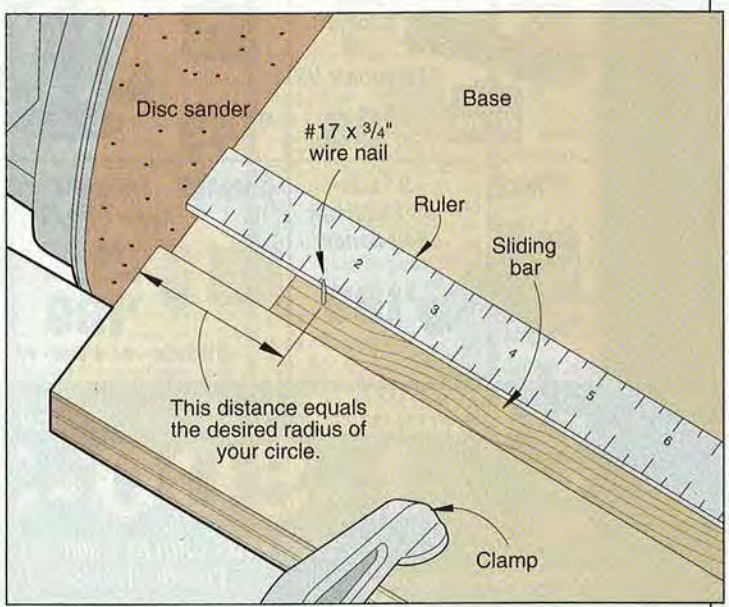

Project Design: Jan Svec
Photograph: Baldwin Photography
Illustrations: Roxanne LeMoine

MORE PRECISION
A full line of saw blades, dado sets and cutter heads deliver the perfect cuts.

Ask for Genuine Delta Accessories when you visit your Delta dealer. Whether you're buying a new Delta machine or upgrading an old one, (even another manufacturer's machine) the good stuff is the stuff in the Delta package.

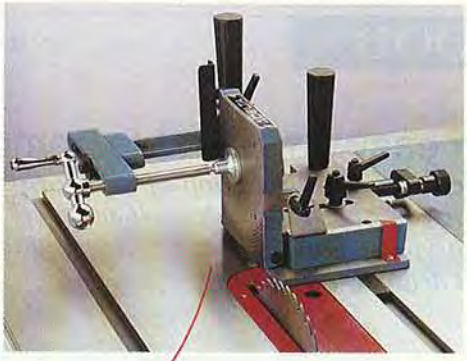

MORE VERSATILITY
Table top accessories such as a Delta tennoning jig or extra miter gages or hold downs can make your saw work harder.

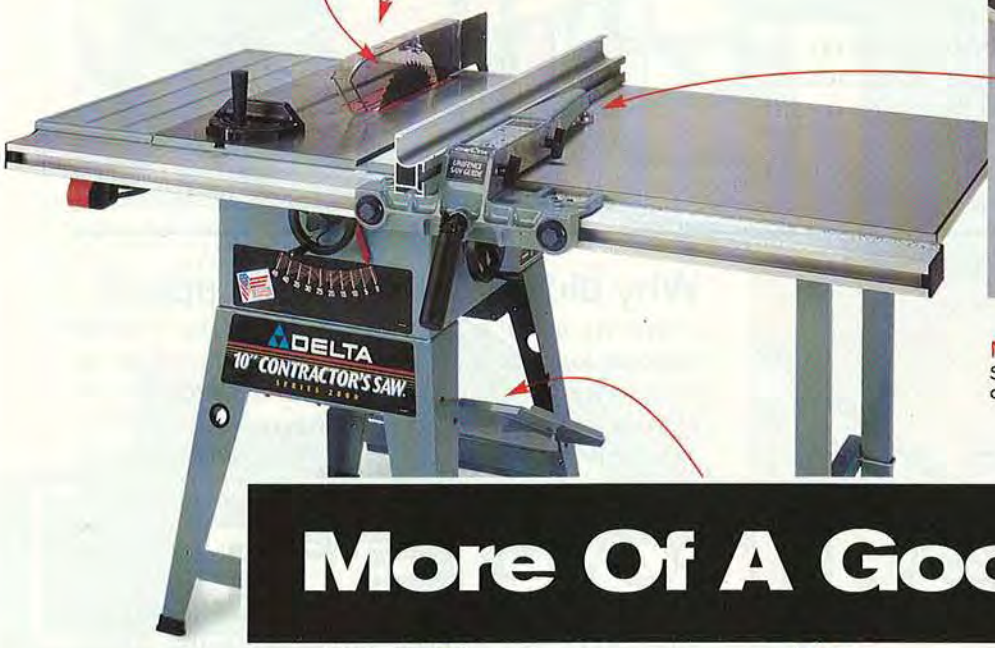

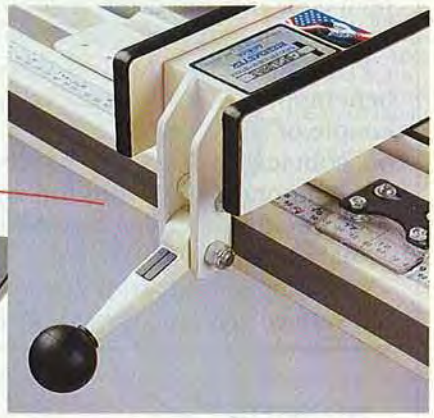

MORE OPTIONS
Specify a Unifence® or Biesemeyer Fence, depending on your needs.

More Of A Good Thing.

MORE SAFETY
Various table extensions or a Deluxe Uniguard® Blade Guard let you handle large jobs.

LESS DUST
Breathe easy. Delta has a full line of dust collection accessories.

MORE MOBILITY
Shuttle any machine to wherever you need it with a hefty mobile base.

Your Delta dealer can accessorize any machine—from band saws to drill presses, to shapers, to table saws—with the stuff that'll make that machine more valuable in your shop. For the name of the Delta dealer nearest you, call Delta International Machinery Corp., 800-438-2486. In Canada, 519-836-2840.

THE POWER OF THE PROS

DELTA
A Pentair Company

Proud sponsor of *The New Yankee Workshop* with Norm Abram and *The American Woodshop* with Scott Phillips.

www.deltawoodworking.com

Making an easy and durable temporary workbench top

I want to attach plywood to the top of my workbench so I can remove and replace it when it wears out. Can you recommend the best way to do this without drilling holes in my workbench?

—Tom Miles Jr., St. Louis

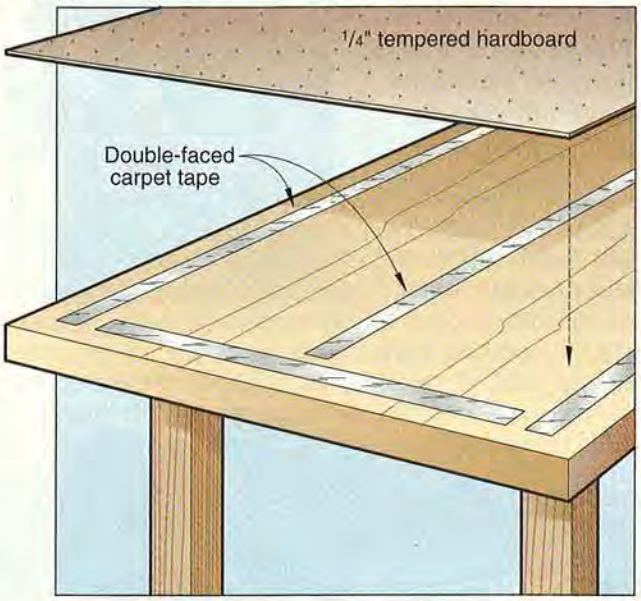

Instead of plywood, Tom, we recommend that you use ¼" tempered hardboard. It'll wear better than plywood, and you can use double-faced carpet tape to adhere it tightly to your workbench.

Place the carpet tape in strips the length of the benchtop, one strip for every foot of width. Stick a couple of strips on the end as well. The tape bonds on contact, so align the hardboard carefully. Cut the temporary hardboard top a couple inches oversize in both directions and then flush-trim it to the actual size of the workbench.

When the hardboard wears out, simply pry up the old surface and tape down a new one.

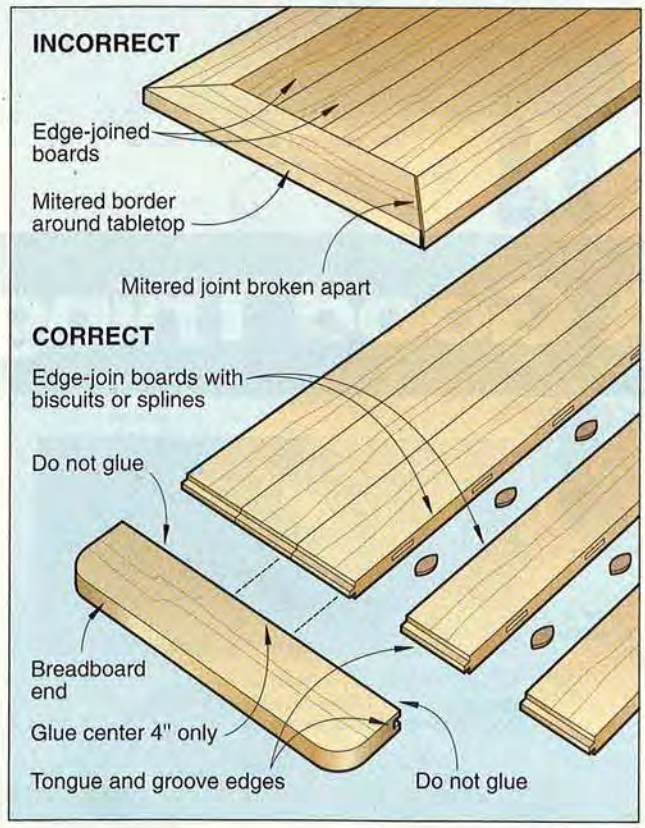

Why did my tabletop pull apart?

I recently made a table for my wife. The 1" solid red-oak top has a border with miter joints at all four corners. I covered all surfaces with three coats of polyurethane to prevent moisture from entering. This summer, one of the miter joints opened up, no doubt due to humidity. What else could I have done to prevent the joint from failing?

—Norm Drenton, Michigan City, Ind.

You're absolutely right to blame humidity for the failed joint, Norm. Even with a protective finish, wood swells and shrinks with the weather, so you need to make design allowances for that movement.

One solution is to use a tongue-and-grove joint where the edge-joined boards and the breadboard end meet. Join these two surfaces by gluing only the center board to the breadboard end as shown at *left*. Leave the rest unglued so the tabletop can contract and expand across its width without damage.

If you're building in the winter, make the two border boards ⅛" longer than the tabletop width, and in the summer ⅛" shorter. This way, your overlap will never be more than 1/16" on each edge, and will stay flush much of the year.

Have a question?

If you're looking for an answer to a question that you think would interest lots of other readers, we would like to hear from you. Write to: Ask *WOOD*, 1716 Locust St., GA310, Des Moines, IA 50309-3023. For an immediate answer to your question, try posting it on one of our internet discussion groups at:woodmagazine.com

Continued on page 32

$50 REBATE
Any Delta 14" Bandsaw—open or closed base. This one's a Delta classic.

$50 REBATE
Delta Sanding Center® Belt/Disc Sander. (Model 31-280)

$100 REBATE
This one will handle just about anything you've got to joint. The Delta DJ-30 12" Jointer (Models 37-360/1) stands ready to take on a whole tree if you've got one.

$100 REBATE
(Model 37-350 with electricals) DJ-20 8" Jointer. A mass of cast iron and precision.

$200 REBATE
Put more productivity and large capacity planing into your shop with the Delta DC-580 20" Planer (Models 22-450/1). Delta will put a couple hundred bucks back into your pocket.

$50 REBATE
Any of our 2000 Series 10" Contractor's Saws® with Premium Fence. (10" Contractor's Saw® II is not part of this rebate offer.)

$50 REBATE
DC-380 15" Planer with stand and extension wings. (Models 22-675Y/6Y)

The Great Rebate.

$100 REBATE
Any model Unisaw®—right or left tilt—Biesemeyer or Unifence.® You spec your dream saw. We'll put a hundred bucks back in your pocket.

Maybe the greatest rebate offer we've ever made. Delta workhorses, every one. The Delta stuff you really wish you had. With a little extra incentive to push you over the edge. A check in the mail from Delta, for a limited time, that is. (Through December 31, 1998.) So pick up the phone and call for the name of your nearest participating Delta dealer. Delta International Machinery Corp., 800-438-2486.

THE POWER OF THE PROS

DELTA
A Pentair Company

Proud sponsor of *The New Yankee Workshop* with Norm Abram and *The American Woodshop* with Scott Phillips.

www.deltawoodworking.com

Continued on page 30

Is it fly paper or finish?

In the past several years, I have made four or five cedar chests using well-dried cedar. Over time, the inside of the chests become sticky. The problem also affects the finish of stored items. What is causing this, and how do I get rid of it?

—Neil Harshfield, O'Neill, Neb.

Neil, we have built several cedar chests here at *WOOD*® magazine, and we recommend that you leave the inside of your chests unfinished. The lack of ventilation inside a chest creates problems with many finishes. In particular, the fumes of Eastern red cedar work to break down virtually any finish in an enclosed space, making even shellac or polyurethane become sticky.

To correct your problem, scrape off the gummy finish, and then wipe down the inside with laquer thinner. And, do not refinish the inside. Remember, sealing the inside also seals off the desirable aroma of this unique wood.

Hit-or-miss stock: the key to thicker boards

My hardwood source offers S2S stock planed to 13/16" thick. However, most of my projects call for 3/4" finished stock, leaving me only 1/16" extra thickness for removing bows and other defects—not enough. Am I to assume that everyone else buys flatter boards? How should I select and prepare the stock so I will end up with a flat 3/4" board?

—C. Lloyd Eitzen, Visalia, Calif.

As you suspect, Lloyd, you need to start with thicker stock. For projects in the *WOOD*® magazine shop, we ask our supplier for "hit-or-miss" planed stock. Unlike S2S (fully surfaced two sides) stock, hit-or-miss stock has been planed only enough to expose the personality and grain of the wood, leaving some areas smooth and others with saw marks.

4/4 hit-or-miss stock costs less than S2S stock and generally ranges from 15/16" to 31/32" in thickness. This extra thickness gives you at least 1/8" more material to work with.

We follow a several-step process to ensure that we end up with perfectly flat 3/4" stock in the finished project. When the stock arrives, carefully store it flat and off the floor, with stickers between the boards. Also, allow it at least 72 hours to stabilize in your shop before working with it. Next, to make jointing easier, cut the stock to rough lengths. Shorter boards mean less material to remove when face-jointing and edge-jointing.

Because the rollers of a thickness planer will temporarily flatten a board before planing, begin by face-jointing the material to flatten one side. To face-joint, run the piece through a 6" or 8" jointer with the concave side against the table (as shown *below)* until the bow disappears.

Once you have a flat side to work with, thickness-plane the opposite side flat and to the correct thickness. Remember to place the flat side against the table with the convex side facing the planer's cutterhead.

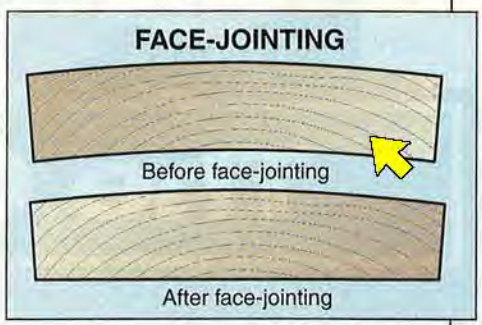

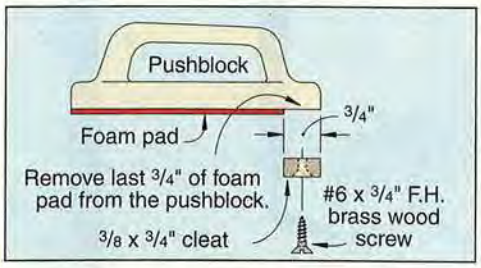

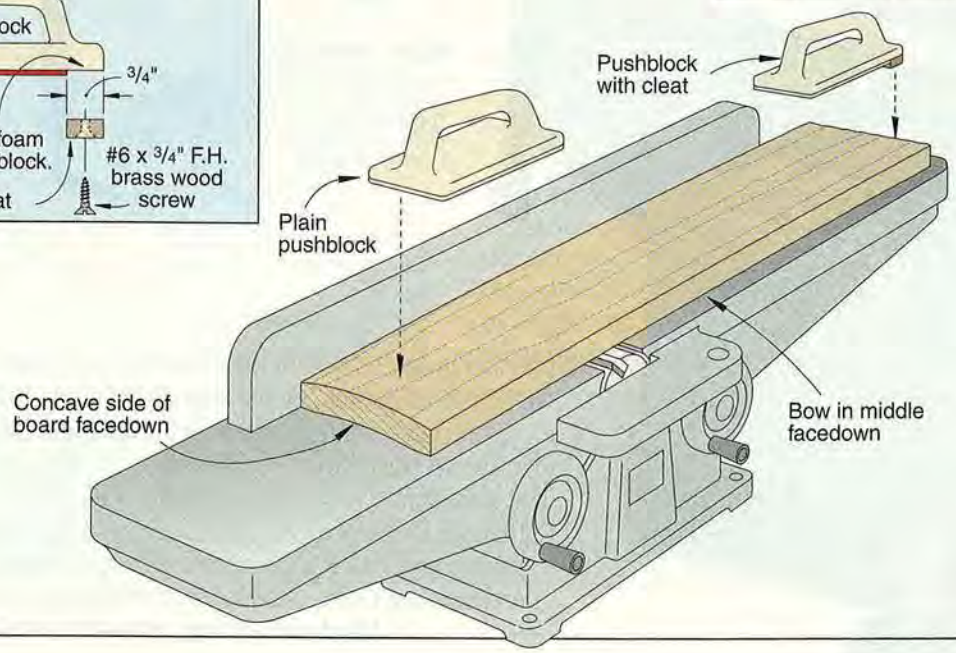

Makita ULTIMATE CORDLESS

ULTIMATE CORDLESS 18V

Intense Power

404 in/lbs of Raw Torque

25% Longer Run Time than the Competition

Industrial Metal Gear Housing

1/2" Keyless Chuck

It's a Real Saw

Huge 6-1/2" Blade for Cutting 2x's at 45°

50% Longer Run Time – 47 2x10s Per Charge

20% Faster Cutting than the Competition

50° Bevel for Maximum Capacity

Model 6343DWAE

Model 5620DWA

Cuts a 2x4 at 45°

18 VOLT

6 1/2" Circular Saw & 1/2" Drill

For more information, call 1-800-4-MAKITA.

David Mattichak's method for making repetitive crosscuts of long stock earns him the Top Shop Tip prize.

You can tell that David Mattichak takes his woodworking seriously. How? Because at the age of 71, he works in a 30×40' workshop that he built last year, complete with an under-the-floor dust-collection system.

In his dream shop, the retired pharmacist has designed and built drop-leaf tables, lecterns, entertainment centers, and step stools. And, he comes up with some darn clever jigs, too, like the prize-winning tablesaw attachment shown at *right*.

Your solution to a particular woodworking problem may be worth $40. If we select it as the Top Shop Tip, you'll win a tool prize valued at $250 or more. To submit a tip, send a letter, including your daytime phone number, and a photo or drawing of your idea, to:

Tips From Your Shop
(And Ours)
***WOOD*® Magazine**
1716 Locust St., GA310
Des Moines, IA 50309-3023

We try to publish original shop tips, so please send your idea only to *WOOD* magazine. Also note that we cannot return submissions. Thanks!

Dave Campbell

GENERAL-INTEREST EDITOR

Extending the scope of your tablesaw

TOP SHOP TIP

When making repetitive tablesaw crosscuts, you typically clamp a stop on a miter gauge auxiliary fence and cut with confidence. But what do you do when the length of the cut extends beyond the face of the miter gauge? To solve the problem, I made a telescoping stop for my saw, as shown *below*.

In a length of ½" steel pipe, I drilled a pair of holes for the knurled knobs where indicated in the drawing *below*, tapped them, and threaded a knob in each. Then, in one end of a ½" steel rod about the same length as the pipe, I drilled a ¼" hole and attached a bolt as shown *right*. I drilled and tapped holes in the bottom of my tablesaw top and used metal strapping to secure the pipe to the table.

Now, with the rod inserted in the pipe, I can slide the stop out to whatever length I need and tighten it in place with the knobs. When not in use, the stop slides all the way into the pipe.

—David Mattichak, Port Republic, Va.

We extend our kudos—and a Hitachi 3-hp plunge router (model M12V)—to Top Shop Tip winner David Mattichak.

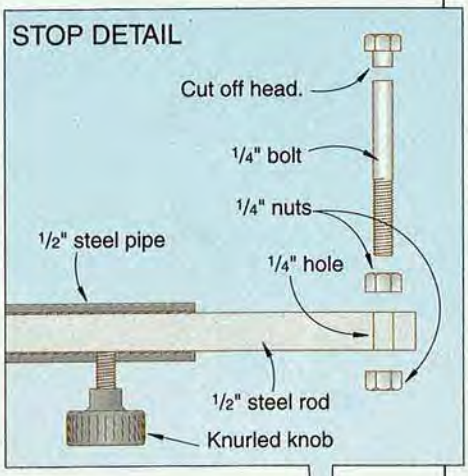

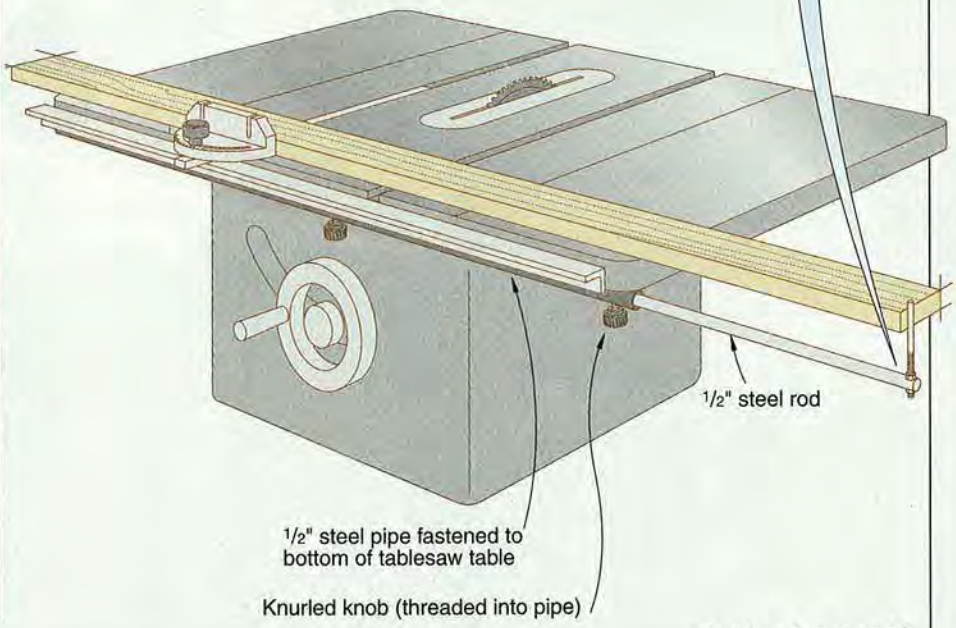

Continued on page 36

WANTED REWARD

Wanted for sawing, planing, drilling, molding and jointing in all 50 states. JET's band of woodworking tools was last seen in the company of the legendary contractor's style tablesaw. Anyone with information leading to the purchase of these tools is advised to follow the stampede to your local JET dealer to round up the tools you've always wanted. JET is offering rewards of up to $100 for the purchase of these notorious tools.

REBATES up to $100

October 1, 1998 through February 28, 1999

JET EQUIPMENT & TOOLS

JWTS-10
Contractor's Style Tablesaw
$549 MSRP
−$50 mfr. rebate
$499
after mfr. rebate

JWP-15HO Planer
$100 REBATE

JSL-12BS SHOPLINE™ Bandsaw
$20 REBATE

JWBS-14 Bandsaw
Open or Closed Stand
$25 REBATE

JJ-6CSX
Closed Stand Jointer
$20 REBATE

JPM-13
Planer/Molder
$50 REBATE

DC-650 Dust Collector
$15 REBATE

DC-1200 Dust Collector
$20 REBATE

JTAS-10
Left or Right
XACTA SAW™
$100 REBATE

JSL-10TS SHOPLINE™ Tablesaw
$20 REBATE

JDP-17MF Drill Press
$20 REBATE

For the name of your local JET dealer, call (800) 274-6848 or go to www.jettools.com.
Amounts shown are manufacturer's rebates. Rebates also apply to 40th Anniversary Limited Edition tools.

Continued from page 34

Tablesaw jig helps cut pivot-hinge mortise for cabinet-door frames

Routing or chiseling out the angled mortise for a semi-concealed pivot hinge on a cabinet door takes time and requires a steady hand. But the tablesaw jig shown *below* turns this into a quick-and-simple operation.

To build the jig, start by cutting out the two uprights from ¾" hardwood plywood, or stock that fits into your miter-gauge slot without wobbling or binding. Notch the rear of the uprights to accept the spacer, as shown, and glue and screw the spacer to the uprights.

Next, cut the top of the jig from ¾" particleboard or plywood, and make it big enough to hold the length and width of the cabinet door. Glue and screw the top to the uprights, and attach the lip to the front as shown in the drawing *below left*. Now, put a scrap piece on the jig and make a few test cuts. Vary the height of the blade until you get a mortise that fits the hinge.

—Bob Colpetzer, Clinton, Tenn.

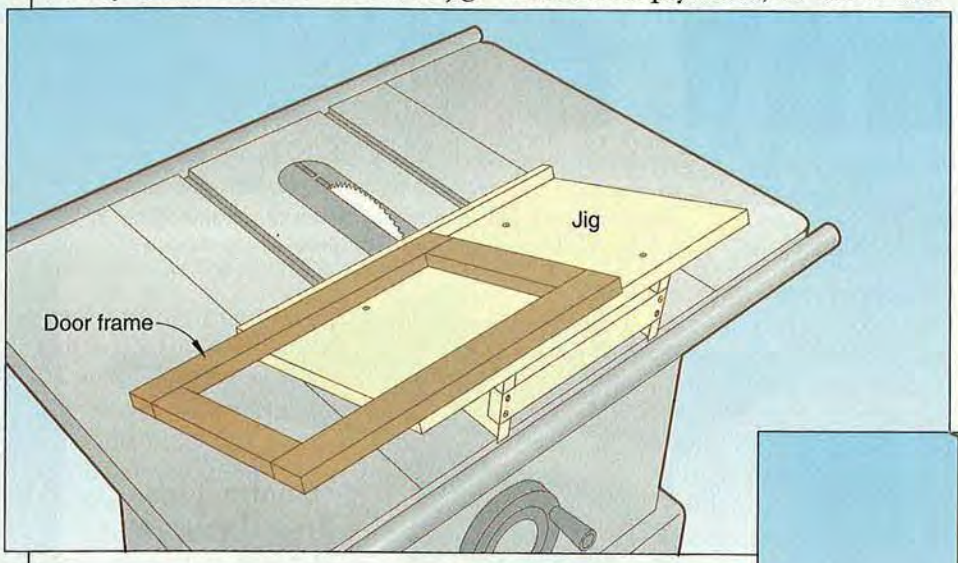

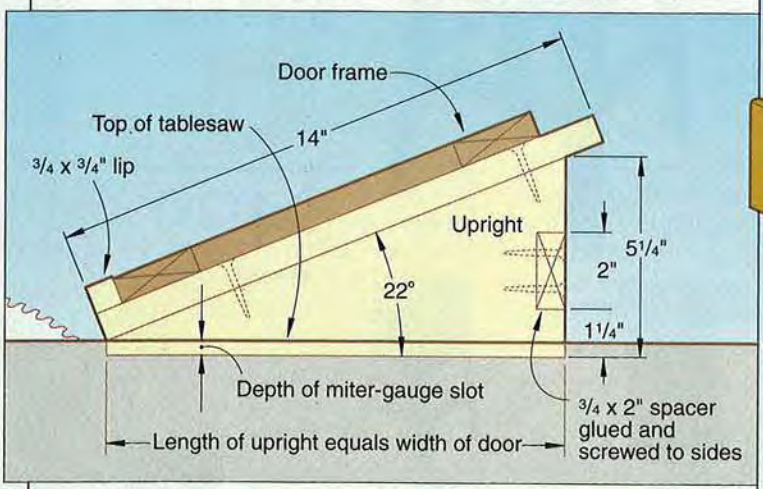

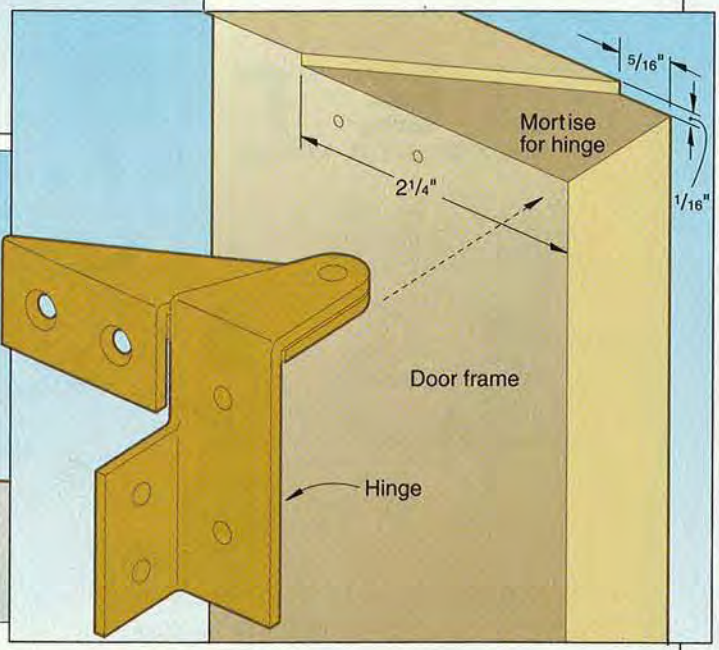

A dab of glue keeps stacked scrollsawn parts together

The next time you want to scrollsaw a number of identical parts, stack them together and join them with a few dabs of cyanoacrylate (instant) glue in the waste areas. The glue holds the stack firmly, and the project pieces fall out easily after you finish sawing. Use the glue sparingly so it doesn't spread to the parts you want to separate after cutting.

—Jim Dowing, WOOD® Magazine Design Editor

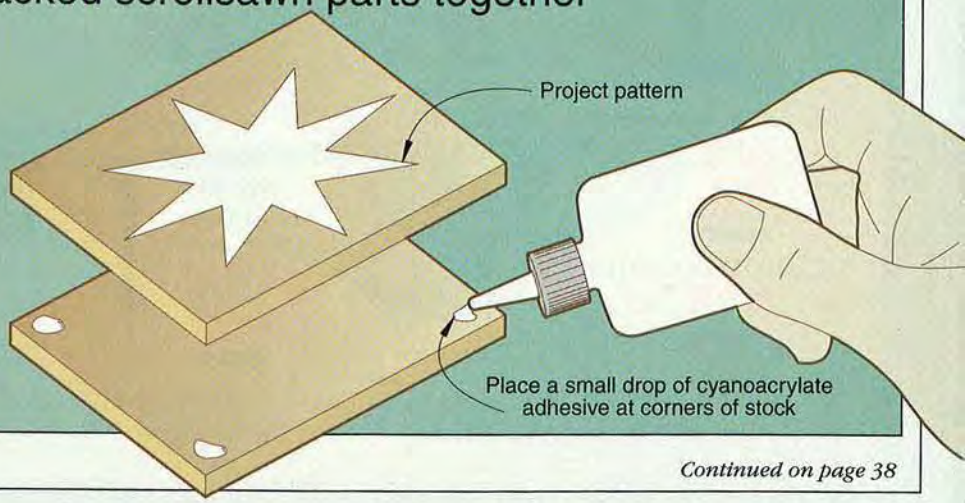

Continued on page 38

MITER STOPS THAT MAKE FINISH WORK AS EASY AS PAINT BY NUMBERS.

As anybody knows, getting the right measurement is key to making a precise cut. That's why the stops on the Craftsman Compound Miter Saw are color-coded for crown molding, rafter and miter cuts. If you want to know more, like the fact it packs a 12" carbide-tipped blade and powers up to 3.5 HP, go to our Web site at www.sears.com/craftsman. You'll find everything you need to finish any job with unflinching exactness.

CRAFTSMAN

MAKES ANYTHING POSSIBLE℠

©1998 Sears, Roebuck and Co.

Save $10* on this video and become a member of the American Association of Woodturners

* $19 members/$29 non-members

Join the AAW and receive our quarterly journal AMERICAN WOODTURNER, our annual AAW RESOURCE DIRECTORY and discounts on special publications and videos.

Turning Projects from Scrap with Robert Rosand

Bob has been turning professionally for 18 years and is a founding member of AAW. Enjoy his ideas for small turning methods, texturing and extraordinary projects!

Send your name, address, phone number and $25 annual membership fee (Canada: $30, Overseas: $40 - in US dollars drawn on a US bank) to:

American Association of Woodturners
3200 Lexington Ave., Dept. WM1
Shoreview, MN 55126
Tel: 651/484-9094
Fax: 651/484-1724

Circle No. 1110

Biesemeyer Quality Products Set The Standards in Woodworking

Generations of woodworkers have relied on the quality and dependability of Biesemeyer® hand-crafted products, long the industry standard of excellence. Our *original* T-Square® rip fence continues to serve as a *model* of design and durability. Carefully built for consistent accuracy and convenience, Biesemeyer® products have a history of making any job faster, safer and economical.

All Biesemeyer products come with an automatic two week guarantee of satisfaction in use.

Contact us or visit our web site for the name of our distributor nearest you.

BIESEMEYER®

A Subsidiary of DELTA WOODWORKING MACHINERY

216 S. Alma School Road • Suite 3 • Mesa, AZ 85210

1-800-782-1831

Fax (602) 834-8515
Web Site Address: www.biesemeyer.com
E-Mail Address: mail@biesemeyer.com

TIPS FROM YOUR SHOP (AND OURS)

Continued from page 36

Knife blade gets you through close scrapes

Sometimes you need an extra-small scraper to clean up an area where the typical cabinet scraper just won't fit. Here's a quick answer to that problem. Take an old blade from a utility knife and grind all the edges flat. You'll end up with a nice burr on all four edges. The two short edges of the blade help you scrape into even the tightest spaces.

—Jan Svec, Assistant Design Editor, WOOD® magazine

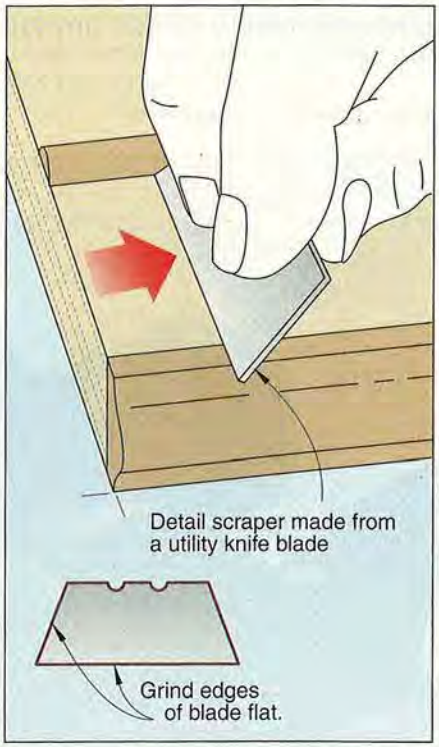

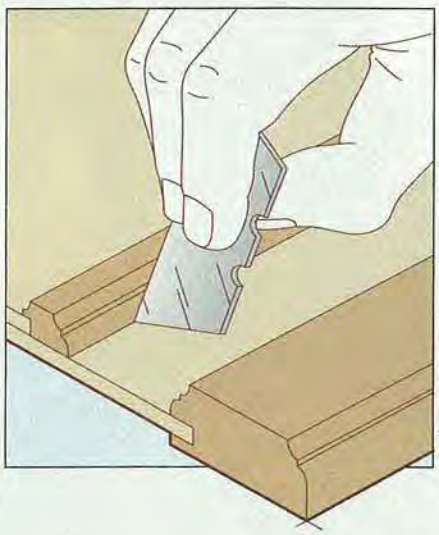

Continued on page 41

CMT™ A perfect SET UP

item 800.505.11

The CMT 13 Piece Set includes a selection of our most popular bits in the most requested cutting diameters: 3 Straight bits (1/4", 1/2" and 3/4"), a 1" Flush Trim bit, 1/2" Mortising bit, 1/8" Round Nose bit, a 90° V-Groove bit, a 1/2" -14° Dovetail bit, 1/2" Cove bit, 3/8" Rabbeting bit, 3/8" Roundover bit, 1/4" Ogee bit and a 1-3/4" - 45° Chamfer bit. Beautifully packaged in our hardwood case and marked with each profile on the outside for easy reference.

item 800.515.11

The CMT Sommerfeld 6 Piece Cabinetmaking Set features the uniquely designed Raised Panel bit with Back Cutter that mills both the front and back of the floating panel in one pass and the new cove profile Drawer Front bit. You also get the Ogee Rail and Stile matched pair, Ogee Door Edge bit and Super-Duty Flush Trim bit. Cathedral, French Provincial, Classic Country or Roman style templates are available separately from the CMT catalogue along with a companion video by Marc Sommerfeld.

If you work wood, get set with *the only* ORANGE *one*

PLYWOOD GROOVE SET

The CMT Plywood Groove Set has been specially designed with bit diameters slightly smaller than purported plywood thicknesses so you get accurate, tight fitting joints.
Each bit guarantees super clean grooves in the three most popular thicknesses of plywood: 1/4", 1/2", and 3/4".

item 811.501.11

ROUNDOVER SET

The CMT Roundover Set gives you the maximum flexibility when doing edge work and borders by putting the most requested diameters in one package - 1/4", 3/8", and 1/2".

item 838.501.11

RABBETING SET

The CMT Rabbeting Set includes a 1-3/8" diameter micrograin carbide tipped rabbeting bit and 6 interchangeable bearings (hex key and screw included) to let you flush trim and make 6 different rabbet depths ranging from 1/8" to 1/2".

item 835.502.11

These CMT sets give you only the best - quality super strength steel shanks and bodies and micrograin carbide-tipped bits, each one protected with CMT's trademark orange Teflon® coating. There's no better value for the price.

Circle No. 1312

FOR THE NAME OF THE CMT DEALER NEAREST YOU OR A COPY OF OUR CATALOGUE CALL CMT USA

CMT USA, Inc. 307-F Pomona Drive Greensboro, NC 27407 Toll free 1-888-CMT-BITS Free fax 1-800-268-9778 cmtusa@aol.com
CMT Utensili Srl Via della Meccanica - 61020 Chiusa di Ginestreto PS - Italia - cmtsrl@pesaro.com www.cmtutensili.com

What would you build if quality power tools were affordable?

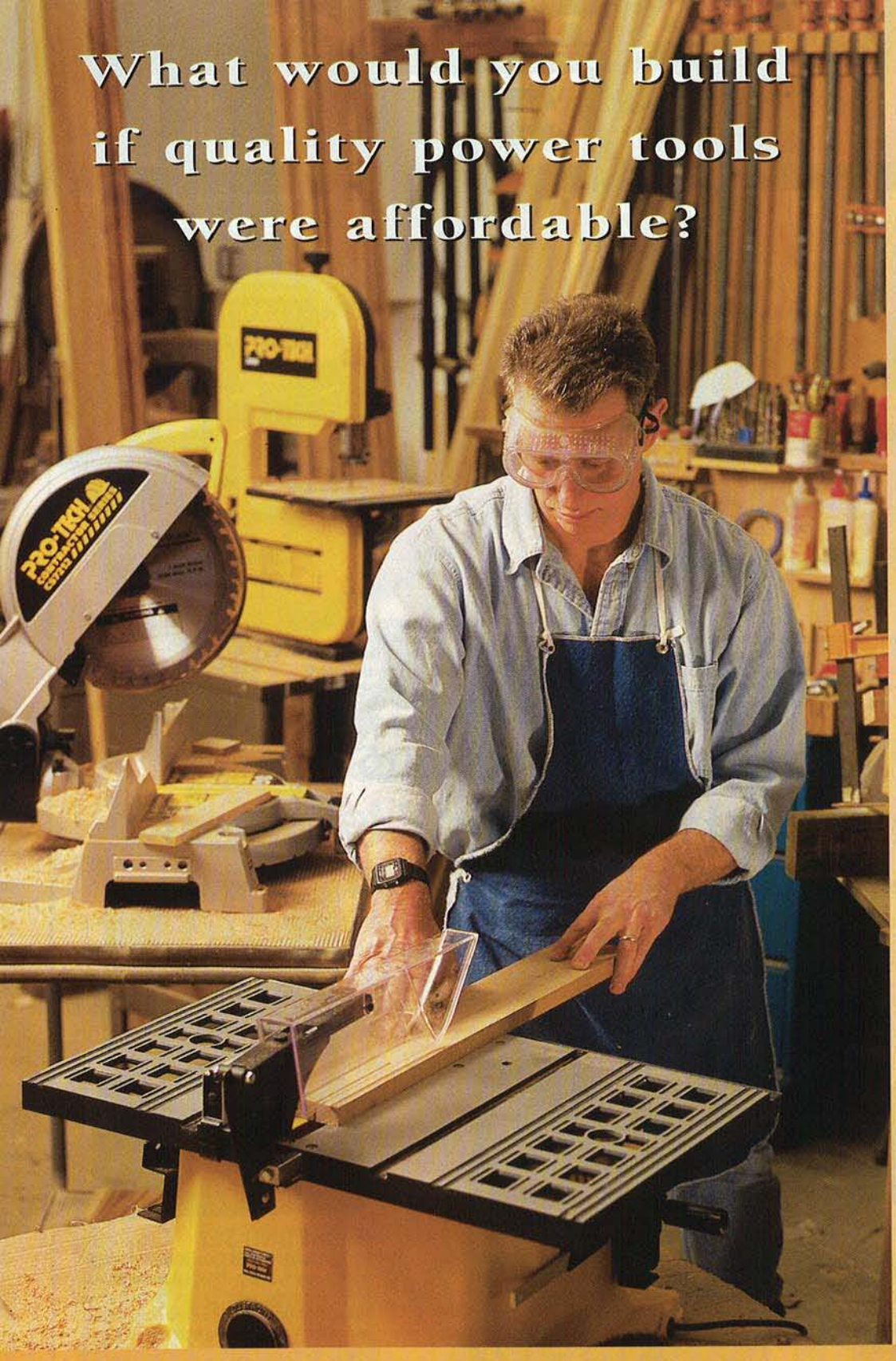

What woodworking projects are you not tackling because you can't afford the right power tools? The answer is none at all if you're already using products from Pro-Tech's value line of affordable, high-quality power tools.

For the nearest dealer or a free product catalog, call us at 800-888-6603.

PRO-TECH

Building On Value™

Since 1985

Continued from page 38

Avoid a mess with mesh

Here's a neat and easy way to stain small parts, such as drawer pulls, plugs, and shaker pegs. Start with an old cake pan. Cut and bend ¼" hardware cloth so that it fits inside the pan, reaches nearly to the bottom, and has enough left at each end to serve as handles. Pour stain into the pan, place the wooden parts on the mesh tray, and lower it into the pan. After the parts are coated with stain, lift the tray, put a couple of scrapwood stickers across the pan, and set the tray on them. Let the excess stain drip off, then wipe them.

—R.B. Himes, Vienna, Ohio

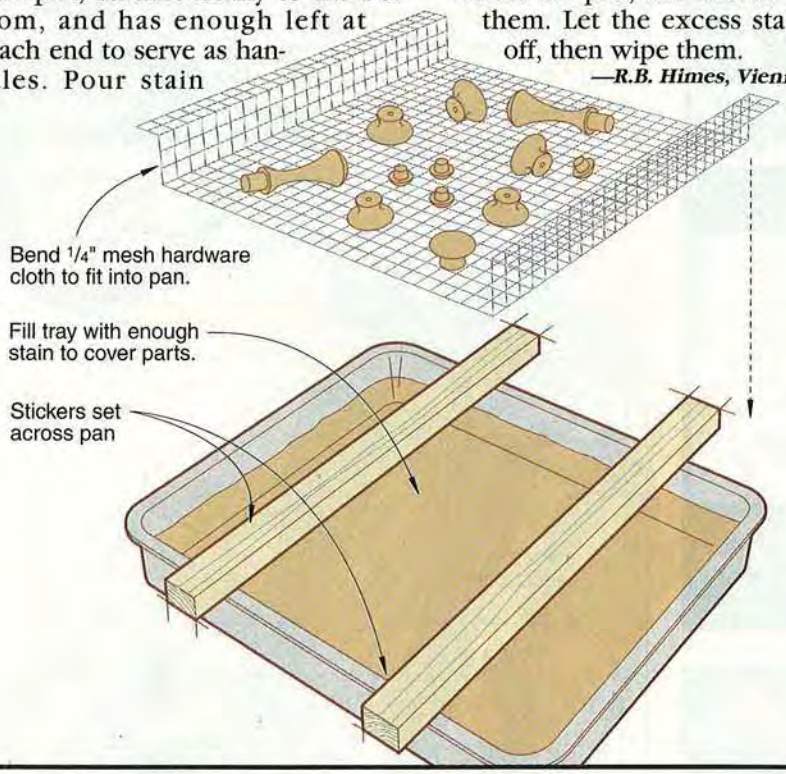

Overhead organizer keeps your dowels rounded up

I've tried various types of storage for dowels, but never was satisfied. Finally, I took some 4" plastic pipe left over from my dust-collection system and cut several pieces into 2"-long rings. Using ¾" sheet-metal screws, I fastened the rings to 2"-wide slats long enough to span a few ceiling joists. I screwed the boards to the joists, as shown *below,* spaced so that they hold dowels of 2', 3', and 4' lengths. A label on the bottom of the first ring in each rank tells me what diameter of dowel it contains.

—Austin Jelbert, Welland, Ont.

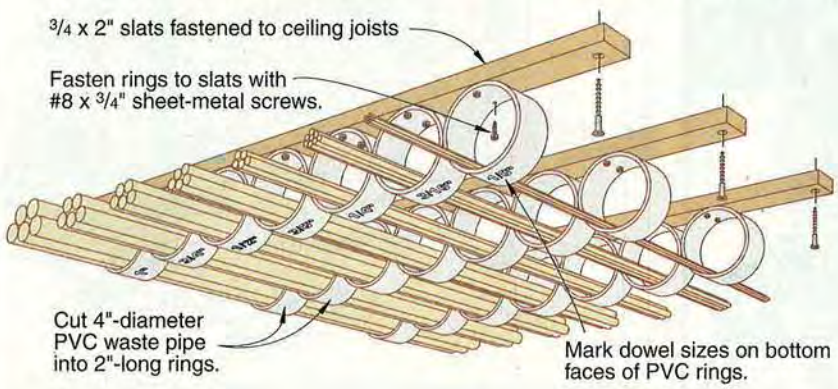
3/4 x 2" slats fastened to ceiling joists
Fasten rings to slats with #8 x 3/4" sheet-metal screws.
Cut 4"-diameter PVC waste pipe into 2"-long rings.
Mark dowel sizes on bottom faces of PVC rings.

Continued on page 42

The Professional's Choice

for over 60 years

Titebond

Tech Service
1-800-347-GLUE

Customer Service
1-800-669-4583

©1998 Franklin International

MADE IN GERMANY
Shop quality in portable power tools.

Think you know tools . . . you don't know Festo.

- Sophisticated Guide System
- Durable Precision
- Innovative Design
- Systematically Mobile
- Dust Extractable
- Uniquely Quiet
- Ergonomic
- Reliable Investment

For a full catalog contact:

TOOLGUIDE CORPORATION

FESTO TOOLTECHNIC

2533 N. Carson St., Suite 3063 • Carson City, NV 89706
888-337-8600 Fax 805-966-6425 www.toolguide.net

Gross Stabil Corporation
P.O. Box 368 • Coldwater, MI 49036
toll free: 800-671-0838 • 517-278-6121 • fax: 517-278-5523

Circle No. 2230

TIPS FROM YOUR SHOP (AND OURS)

Continued from page 41

Sure cure for miter-joint double-bypass

It can be tough to make great-looking miter joints because it seems like one piece is always trying to sneak past the other during clamping. These handy corner-clamping blocks eliminate this bypass problem. I place one of these blocks between the clamp and the workpiece in each corner, as shown *bottom*, and tighten the clamps. The blocks protect your workpieces and hold them in perfect 90° alignment to ensure a square assembly.

—Chuck Hedlund, Project Builder,* WOOD® *Magazine

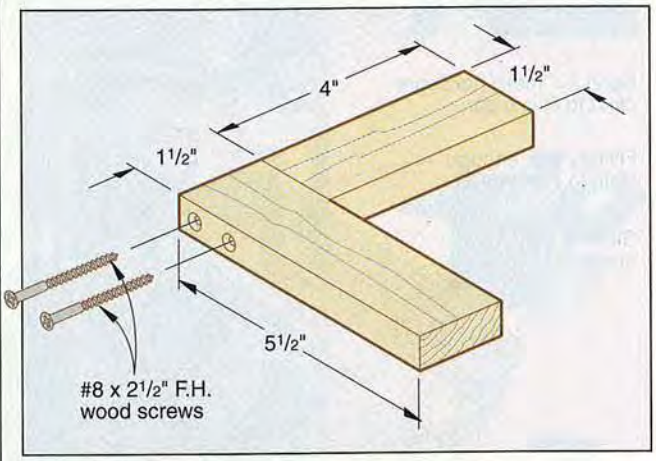

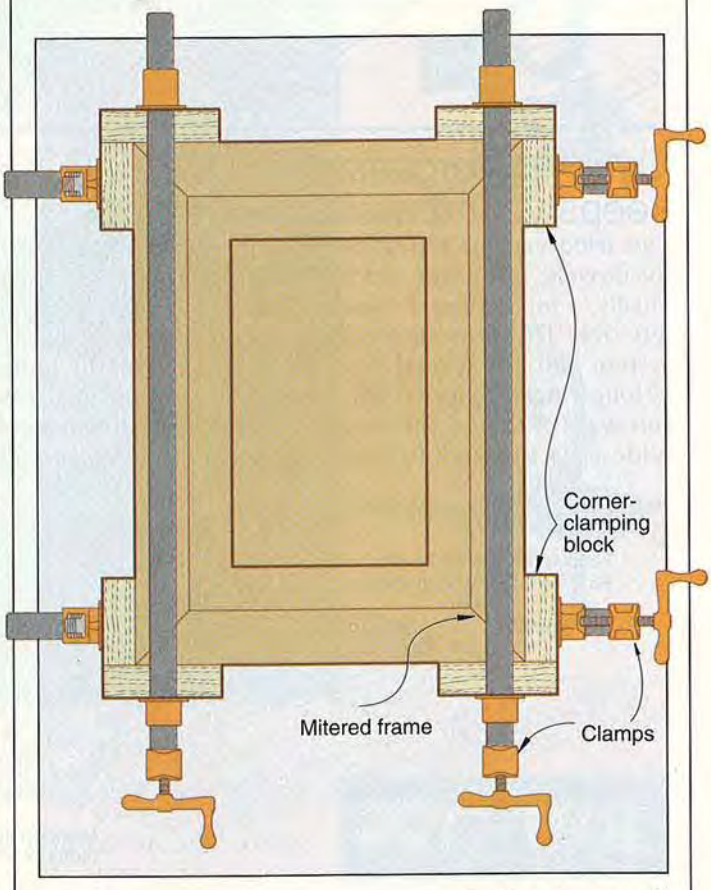

Continued on page 44

TOOL TALES

REAL STORIES OF *LEATHERMAN® TOOLS* AND THE PEOPLE WHO USE THEM.

№ 22

800 Kilometers Deep in Siberia. Busted Spokes. Next Bike Shop: Another 5,000 Kilometers.

There I was, crossing Siberia's remote Kilimski track. Several spokes on my mountain bike's wheel broke. I wondered what would happen when ravenous Siberian tigers (not to mention mosquitoes) found out I was stranded. Fortunately I had a *Leatherman Tool* clipped to my pack. Using its powerful jaws, I was able to combine two bicycle spokes into one. My journey continued, cheered on by the occasional babushka.

Dave Scherer
South Fork, Colorado

Leatherman Tools turn ordinary people into inventive do-it yourselfers.

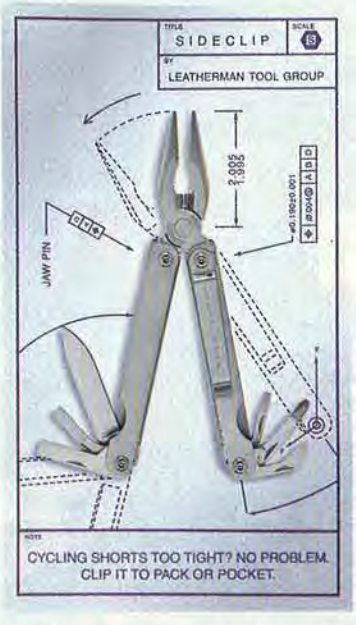

CLIP
NEEDLENOSE PLIERS
REGULAR PLIERS
HARD WIRE CUTTERS
DROP POINT KNIFE
S/M/L FLAT SCREWDRIVERS
PHILLIPS SCREWDRIVER
8"/20cm RULER
CAN/BOTTLE OPENER
25 YEAR WARRANTY

Leatherman means "the original go-anywhere, do-anything tool" in English, Russian and 82 other languages. P.O. Box 20595 Portland, Oregon 97294. (800)-762-3611. www.leatherman.com

LEATHERMAN® | ONE TOOL. A COUPLE THOUSAND USES.®

Start Your Own Business
CUSTOM ENGRAVING

No Experience Necessary • No Artistic Ability Needed

• 400,000 RPM Engraving Tool • Unlimited Potential • Complete Stencils

HIGH SPEED ENGRAVING
SCM
SANDBLASTING

There is no experience necessary because SCM has developed a business opportunity that will have you producing professional engraving in a few short hours – just by tracing lines! ***It's That Easy!***

Engrave on... *• Glass • Wood • Metal • Stone • Marble • Eggs*

To Find Out Just How Easy It Is Call Now For Details... **1-800-755-0261**

W140 N5946 Lilly Road • Menomonee Falls, WI 53051 **(414) 252-3989**

Circle No. 2165

Now the world's only truly accurate, dependable electronic tape is

7X smarter!

Get all the features of the original...

Plus...

- A flip display for right or ***left hand*** viewing convenience.
- Displays the number of repeat measurements stored.
- Store and recall up to 3 measurements.
- Displays decimal feet and decimal inches.
- Output port for connecting to a PC!
- 50% longer battery life.
- Faster readout.

Ask for DigiTape Plus today!

The L. S. Starrett Company
121 Crescent Street, Athol, MA 01331
Tel: 1-800-541-8887 • FAX: (978) 249-8495
Visit Starrett on the web at www.starrett.com

TIPS FROM YOUR SHOP (AND OURS)

Continued from page 42

No more clamp pads slipsliding away

The yellow pads on Quick-Grip clamps have a way of slipping off and getting lost. I've found that if you remove the pads and reverse them—that is, with the closed end toward the bar—they won't fall off and get lost.

—Joseph White, Altus, Okla.

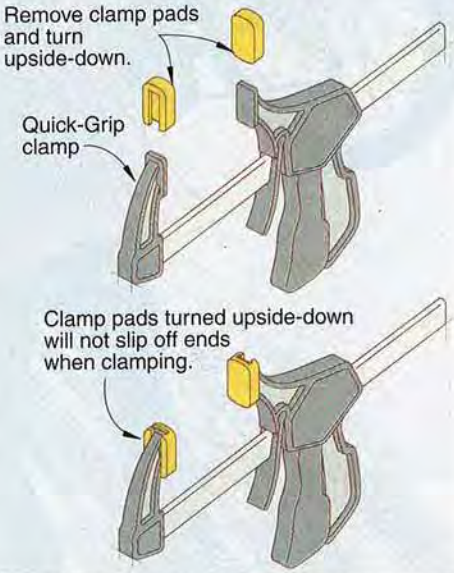
Remove clamp pads and turn upside-down.
Quick-Grip clamp
Clamp pads turned upside-down will not slip off ends when clamping.

A FEW MORE TIPS FROM OUR WOODWORKING PROS

- Drill angled holes precisely with our hole alignment guide. You'll find both the guide and our technique on *page 86*.
- Help create a country finish by spattering the flyspecks with an old toothbrush. See how on *page 73*.
- Do you have to stop and think about the proper direction to feed stock into your router? On *page 22*, Safety Man Mike Gilliland gives you some easy-to-remember guidelines on the feeding of your router.
- Pro turner Rex Burningham shares his hints for selecting bowl blanks in "Turnin' and Tossin'." Learn how he makes the call on *page 74*.

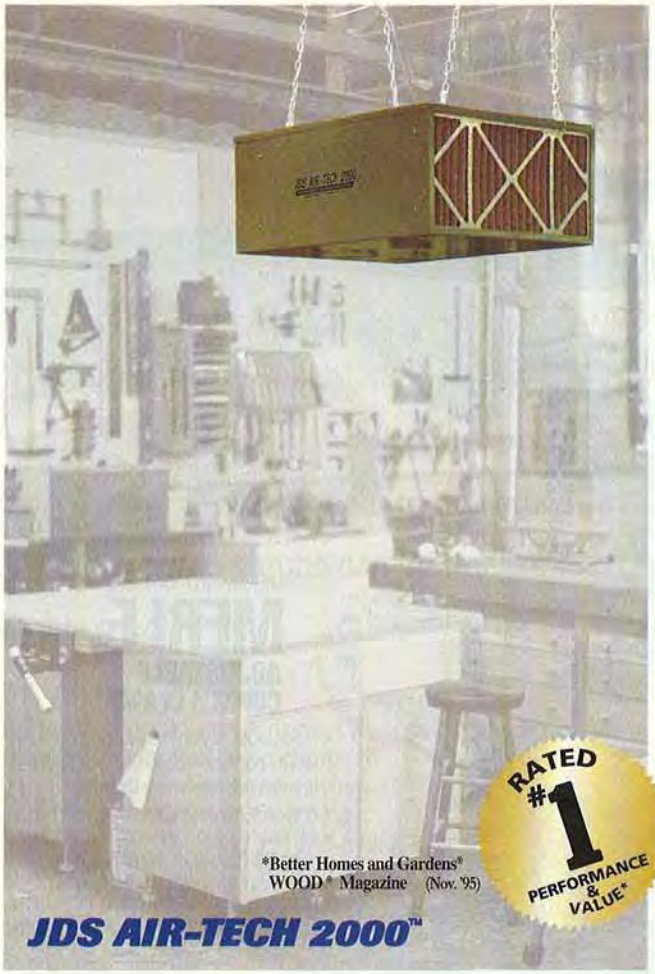

Let's Clear the Air...

Introducing The New Model 750

Simply The Best!

- Variable Speed Control (200 CFM to 750 CFM Filtered Air)
- Two Speed On/Off Pull Chain
- Ultra Quiet
- 95% ASHRAE Tested Main Filter
- Lifetime Warranty
- 30 Day Money Back Guaranty

The National Institute for Occupational Safety and Health (NIOSH) recommends limiting wood dust exposures. The JDS Air-Tech 2000 will dramatically improve the quality of the air you breathe. Our new model 750 variable speed allows you to dial in your desired air flow, from a whisper quiet 200 cfm to an ultra performance 750 cfm. This will clean the air in a 30'x30'x8' shop ten times per hour. For larger areas our models 8-12 and 10-16 are available. The JDS systems will remove 99% of particles as small as five microns and 80% of particles as small as one micron. For the removal of odors, fumes and smoke, our optional charcoal filter is available. To place an order or for the dealer nearest you call us toll-free.

$259.00
Model 750

Another quality product from
Manufactured in the U.S.A.

JDS COMPANY
1-800-382-2637

POWERMATIC® ®

10" Table Saw
Model 411

Extensions provide 26-1/2" x 31" table surface, 4800 RPM, carbide-tipped blade tilts left to 45 degrees, fence has cam action to lock both ends to table, see-through guard, splitter, dust chute, safety switch.

12-1/2" Planer
Model 412

Quick-change double-sided knives, extra long 12" infeed & outfeed tables with stock rollers, safety switch, head-locking mechanism to reduce snipe, 4" dust collection shroud.

Dust Collector
Model 471

1hp, 650 CFM, 2.4 cubic feet capacity, 4" outlet with hose, casters, cloth bags.

Oscillating Sander
Model 14

14-3/4" square cast iron table tilts 0 to 45 degrees, dust collection shroud, comes with 3 spindles & 2 rubber drums (1/4", 1/2", 5/8", 1-1/2", & 2" standard, 3" optional).

Compound Miter Saw
Model 409

Positive stops at 0, 15, 22-1/2, 30 & 90 degrees, 10" carbide-tipped blade, crown molding angle marks, adjustable extensions.

Bench-top tools from Powermatic.
Now aren't you glad you waited?

WOODWORKING EQUIPMENT QUALITY SINCE 1921

1-800-248-0144
for your nearest dealer

home page: http://www.powermatic.com E-mail: powermatic@worldnet.att.net

Circle No. 81

Make perfect Raised Panel Doors

with your 1/4" or 1/2" Router, or your 1/2" or 3/4" Shaper.

It's simple, inexpensive, and easy with professional production quality MLCS carbide tipped door sets! Our reversible combination bit makes a matching rail and stile frame. The panel raising bit with ball bearing guide makes a perfect raised panel every time!

Includes Instructions and Professional Tips!

*Raised Panel Router Bit

*Reversible Combination Rail & Stile Bit
Works with stock from 11/16" to 7/8".

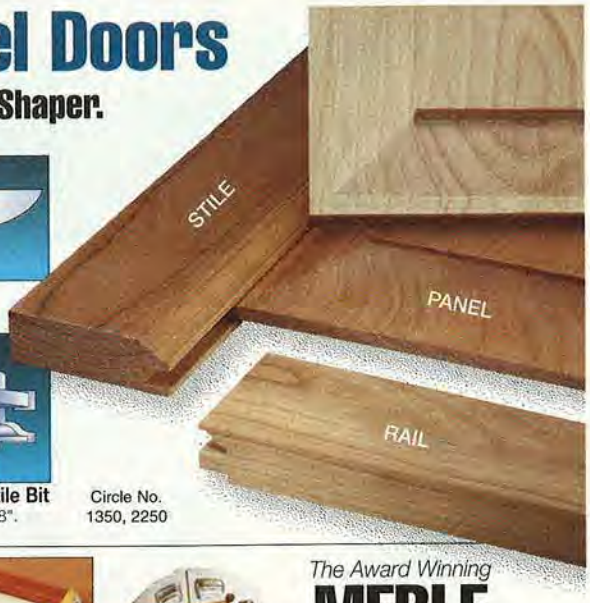

Raised Panel Door Sets *Ball bearing included

SET#	BIT STYLE	LRG. DIA.	SET PRICE
#1301	1/4" Shank Router	*2"	$69.95
#1302	1/2" Shank Router	* 3-1/2"	$79.95
#1303	1/2" & 3/4" Shaper	4-5/8"	$99.95

Raised Panel Door Instructional Video
#1438 Special Sale Price **$9.95**

Circle No. 1350, 2250

1/4" Shank Carbide Tipped Router Bits

Professional Production Quality Guaranteed!

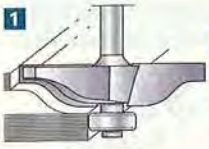

1 OGEE RAISED PANEL
#1423 2" Large Diameter $29.95

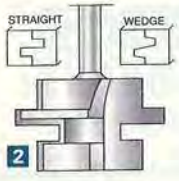

2 TONGUE AND GROOVE
#1333 Straight.....$29.00
#1335 Wedge $29.00

3 BULL NOSE
#1330 1/2" Dia. of Circle.....$16.00
#1331 3/4" Dia. of Circle.....$21.00

4 LOCK MITRE BIT
#1433
2" Dia.,Stock thickness: 1/2"-3/4"..$37.50

5 RABBETING KIT
4 depth of cuts: 3/8", 7/16", 5/16", 1/4". Set: 1/4" shank rabbeting bit, 4 bearings (3/8", 1/2", 5/8", 3/4") & hex key.
#1425 1-1/4" Large Diameter..$25.00

6 BRASS PILOTED
Rout into tight spaces and sharp corners. These bits have Brass Pilots, measuring only 5/32" in dia., instead of usual 1/2" bearing.
#1428 1/8" R Round Over.....$16.00
#1429 1/4" R Round Over.....$17.00
#1430 3/8" R Round Over.....$19.00

7 SOLID CARBIDE UPCUT AND DOWNCUT SET
2 flute flat bottom cutters. Upcut spiral ideal for mortise and tenon joints. Downcut will plunge cut and plane edges.
#1437 1/4" dia., 3/4" cutting length
Special Set Price $19.95

The Award Winning

MERLE ADJUSTABLE CORNER CLAMP®

- Adjustable, uniform clamping pressure on all corners • Great for wide cabinet frames (for center or edges)
- Forces a frame into perfect square
- Almost NO capacity limitation, ships with **23 ft. reel of steel banding !**
- Aluminum & Steel construction

★★★★★ Performance & Value **Editors Choice** Wood Magazine

ITEM #1420
REG. $39.95 ..... **Sale $24.95**

The Can-Do Clamp

- Join picture and cabinet frames
- Clamps to 2-3/4" wide
- Easy Mounting • Use as bench vise

Sturdy aluminum clamp is great for framing, drilling, doweling, and more.
- High clamping pressure
- Movable jaws • Two swivel points

ITEM #1367 REG. $29.95 ..... **Sale $24.95**

16 Piece Forstner Bit Set

High Quality Steel - ground for heavy use

This set comes with the following sizes: 1/4", 3/8", 1/2", 5/8", 3/4", 7/8", 1", 1-1/8", 1-1/4", 1-3/8", 1-1/2", 1-5/8", 1-3/4", 1-7/8", 2", 2-1/8".

ITEM #1418 REG. $141.20 ..... **Sale $43.95**

Solid Brass Router Inlay Kit

Makes perfect fitting recesses and inlays!

Easy to use inlay kit follows a 1/4" thick pattern template of almost any shape to produce the recess. Fits Porter Cable, Black & Decker or any router with an adaptor for Porter Cable bushings. Kit includes 1/8" solid carbide downcut spiral bit, brass bushing, brass template guide, brass retainer nut & instructions.

ITEM #1426 REG. $35.95 ..... **Sale $21.95**

Round Over/Beading Bit Set

1/4" shank, Carbide Tipped, 4 Round Over Bits with 1/2" OD bearing: (1/8", 1/4", 3/8", 1/2"), plus 3/8"OD bearing & allen wrench.

ITEM #1434
$72 Individually..... **Sale $39.95**

Biscuit Joining Set

5/32" Slot Cutter-1/4" Shank and 250 #20 Biscuits

Instruction sheet included.

ITEM #1385
REG. $35.00..... **Sale $29.95**

Call us for your **FREE CATALOG**

Expert technical help before and after sale

©1998

MLCS

Router Bits & Professional Woodworking Products

ORDER TOLL FREE 24 HOURS A DAY! **1-800-533-9298**

Shipping is FREE!

*IN CONTIGUOUS USA FOR ALL ITEMS

VISA MasterCard DISCOVER

Order By Credit Card or Send Check To:
MLCS, P.O. Box 4053 DV, Rydal, PA 19046

www.mlcswoodworking.com

An Up-Close Look at a Tree

Sure, you know what a tree is. Or do you? There's a lot to know. First of all, depending on where they grow, some of the 865 or so tree species native to North America north of Mexico may appear to be shrubs, which aren't trees. And some shrubs can be treelike. Really, then, what is a tree?

Print this article

Is it a shrub or a tree?

Trees are the largest living plants. In fact, they're the oldest known living things. They're characterized by a mature height of at least 15' and a single woody stem called a trunk of at least 3" in diameter that stands by itself. Shrubs, on the other hand, usually have more than one woody stem and none of the stems normally grow as thick or tall as a tree.

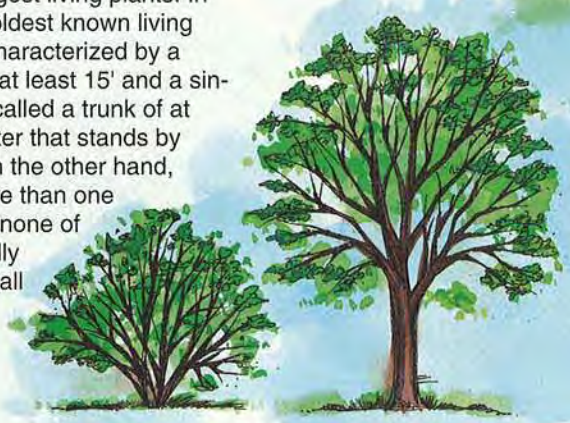

Two types of trees—broadleaf and needleleaf

Although there are hundreds of tree species (oaks, pines, palms, etc.), foresters and those in the wood products industry refer to only two general types: *broadleaf* trees and *needleleaf* trees.

Botanists also refer to broadleaf trees of the temperate regions as *deciduous*, meaning that most of them annually drop their leaves and grow new ones. They also call needleleaf trees *conifers* or *evergreens* because with few exceptions they retain their green needles all year.

Leaf of broadleaf tree (northern red oak)

Leaf of needleleaf tree (eastern white pine)

Anatomy of a Tree

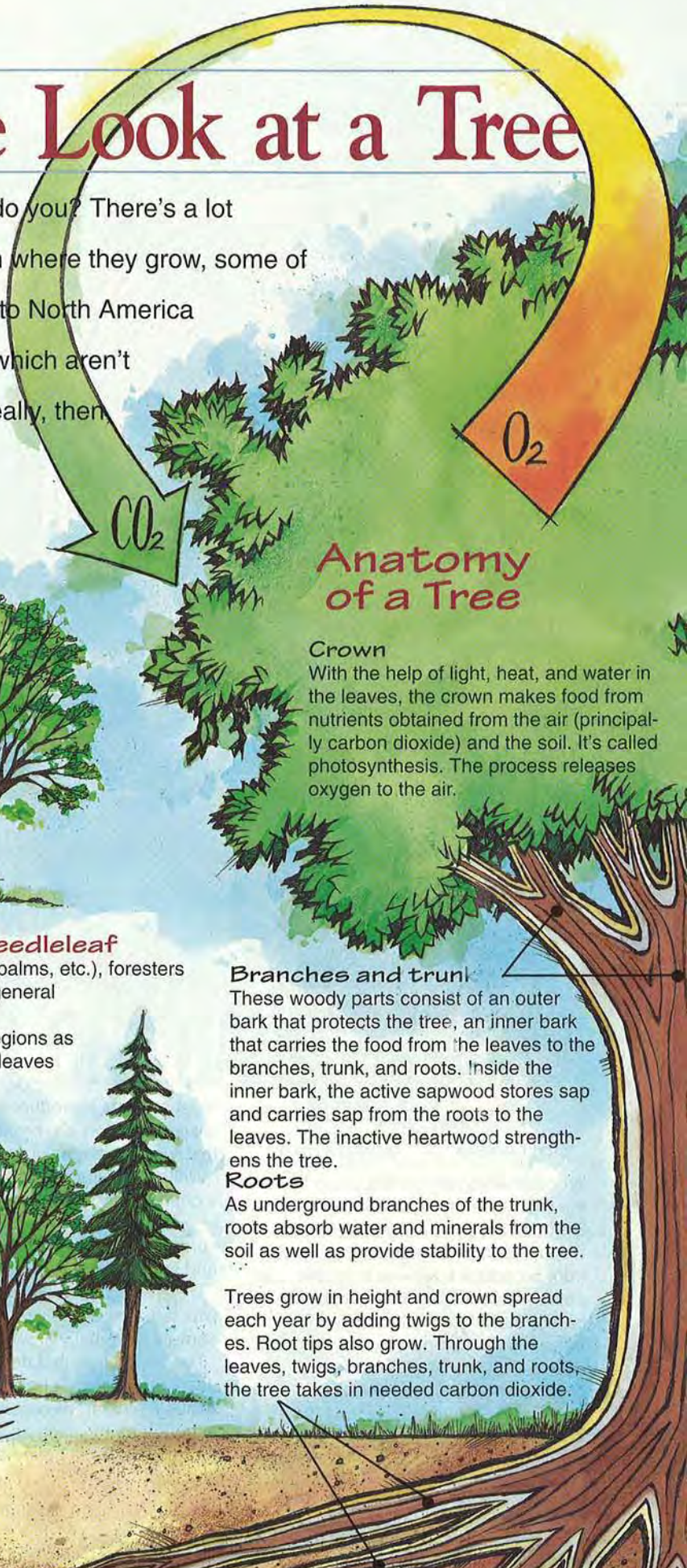

Crown

With the help of light, heat, and water in the leaves, the crown makes food from nutrients obtained from the air (principally carbon dioxide) and the soil. It's called photosynthesis. The process releases oxygen to the air.

Branches and trunk

These woody parts consist of an outer bark that protects the tree, an inner bark that carries the food from the leaves to the branches, trunk, and roots. Inside the inner bark, the active sapwood stores sap and carries sap from the roots to the leaves. The inactive heartwood strengthens the tree.

Roots

As underground branches of the trunk, roots absorb water and minerals from the soil as well as provide stability to the tree.

Trees grow in height and crown spread each year by adding twigs to the branches. Root tips also grow. Through the leaves, twigs, branches, trunk, and roots, the tree takes in needed carbon dioxide.

What if you opened the trunk?

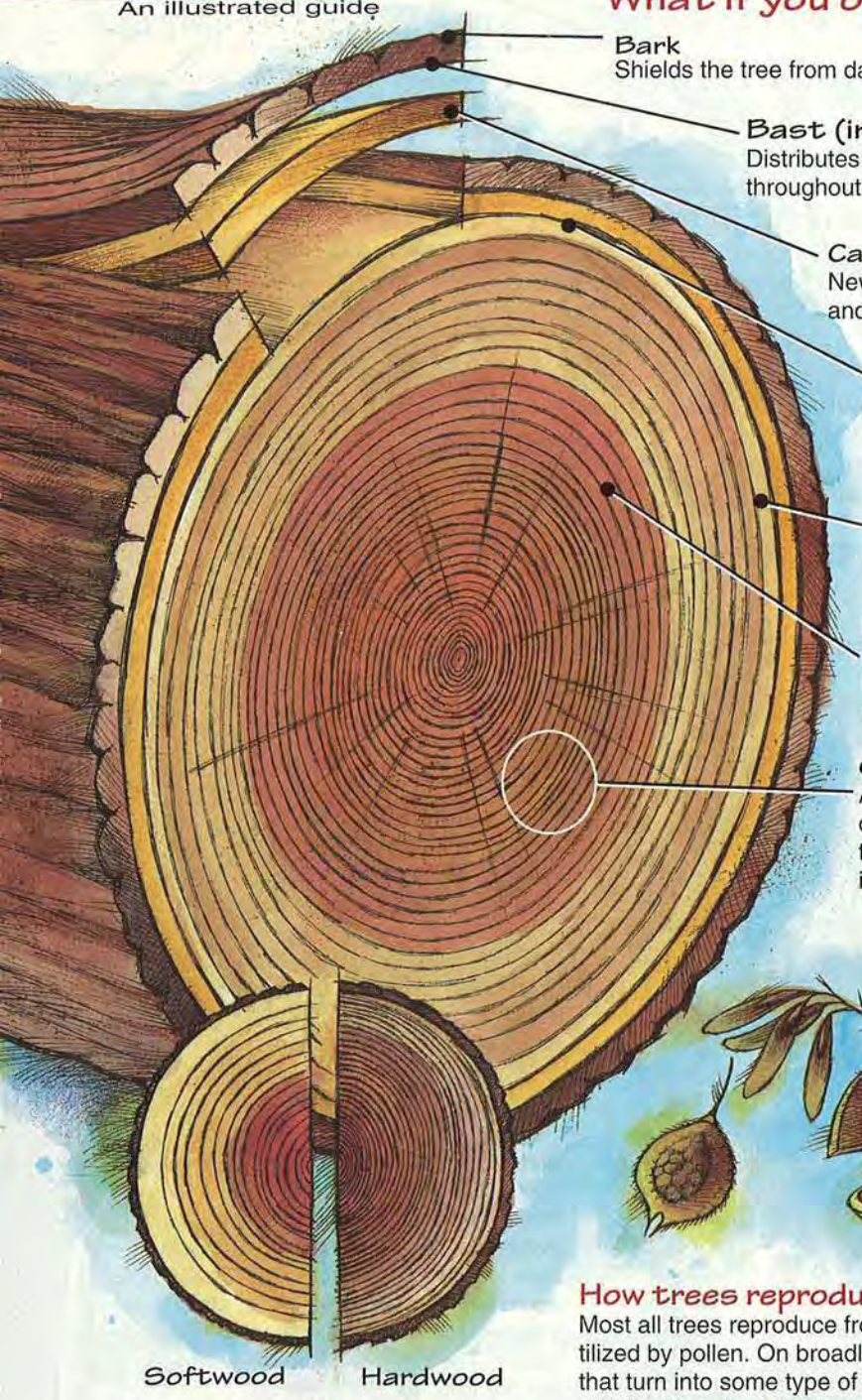

Bark
Shields the tree from damage and disease; protects it from drying out.

Bast (inner bark)
Distributes dissolved food from the leaves throughout the tree.

Cambium
New wood cells grow on the inner side and new bark cells on the outer surface.

Medullary rays
Pipelines carry food back and forth from the bark to the stem's center and store food reserves.

Sapwood
Lighter-colored wood cells carry sap from the roots to the leaves.

Heartwood
Old wood cells that no longer carry sap. They accumulate extractives to give the wood color. Because they are dead, decay can begin here.

Growth rings
A tree forms a new one each year that it grows. The darker part of the ring comes from the slower growing time and is called latewood. The lighter, often wider, part is earlywood, put on when the tree grew vigorously.

Softwood Hardwood

Woodworkers refer to the wood from the two types of trees, even the trees themselves, as *hardwood* and *softwood.* Hardwood refers to the wood from broadleaf trees—ash, maple, oak, and so forth—which many times is harder than the wood from needleleaf trees—lodgepole pine, white pine, and others. The trunks of some tree species of both types have sapwood that's more valuable than the heartwood. On others, it's just the opposite.

How trees reproduce

Most all trees reproduce from seed (tree ferns reproduce by spores) that was fertilized by pollen. On broadleaf trees, the seeds come from flowers, or blooms, that turn into some type of fruit—a walnut, for instance.

While the fruits of all broadleaf trees don't always resemble a nut or an apple or a cherry, they're still referred to as fruits. Needleleaf trees produce seeds that lie in cones or similar structures, and are released when the cone opens. Seeds are spread by animals, birds, wind, and water. Eventually they find a home in the soil and sprout when the time is right.

Trees also can successfully reproduce by sending up sprouts from a stump that was left after a tree was cut down or blown down, or from root sprouts. These sprouts eventually grow into trees (black cherry and redwood regularly do this).

The young tree that develops from a seed is called a seedling. Once the seedling reaches a height or 6' or more and its trunk grows to 2" thick, it's called a sapling. Most trees reach adulthood when their diameters develop to 16–18", although many, such as a bur oak, do not become fully mature for 200 years or more. Softwoods become "sawtimber" at 9" diameter, hardwoods at 11".

Illustrations: Brian Jenson

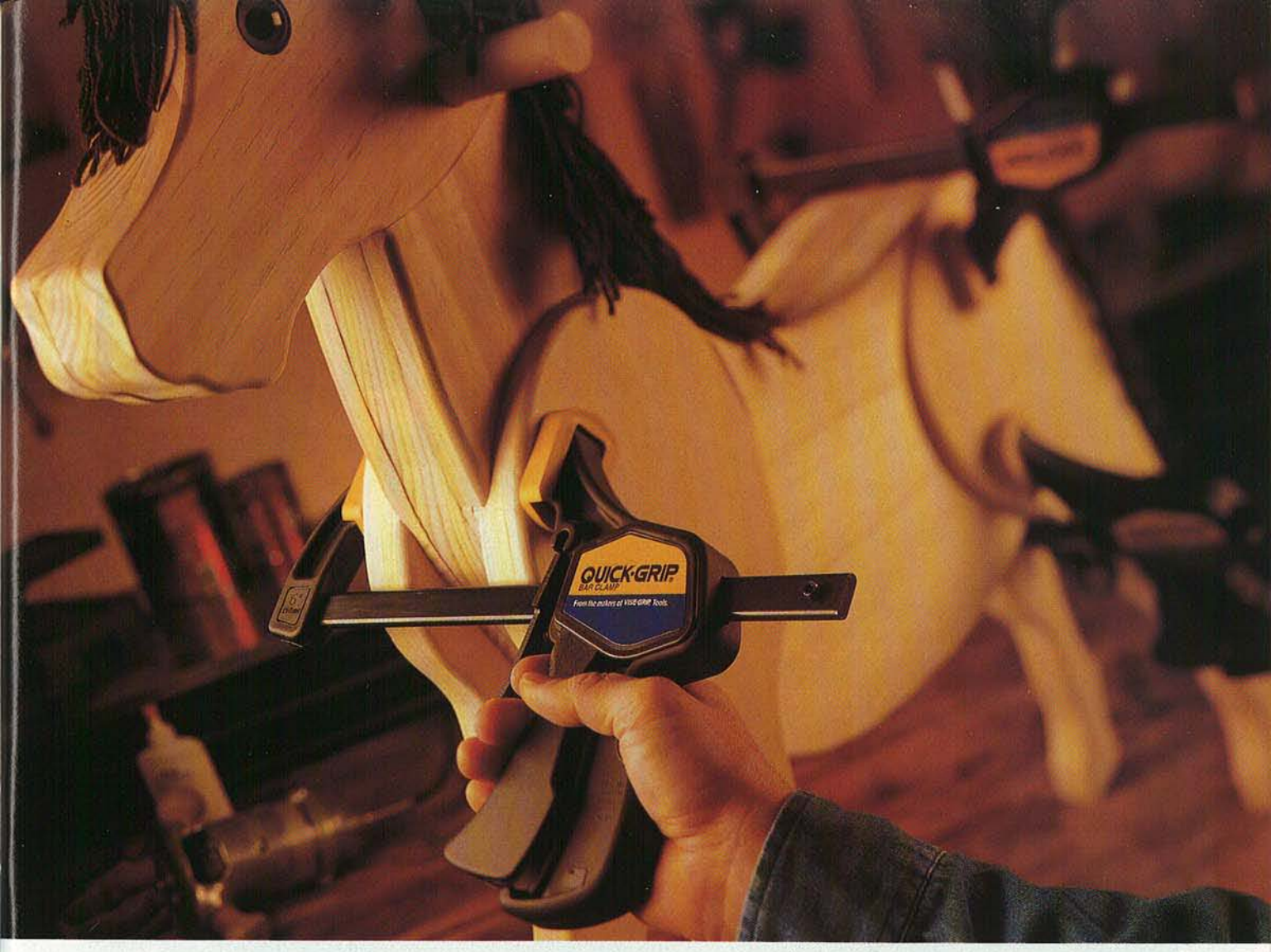

WE PUT EVERYTHING WE KNOW ABOUT CLAMPING INTO ONE HAND—YOURS.

Spring Clamp
1", 2", 3"
Jaw Openings

Micro Bar Clamp
4 1/2"
Jaw Opening

Mini Bar Clamp
6" and 12"
Jaw Openings

Bar Clamp
6", 12", 18", 24", 36", 50"
Jaw Openings

Macro Bar Clamp
10", 20", 33 1/2"
Jaw Openings

Presenting the QUICK-GRIP® Bar Clamp – one convenient tool for all your clamping needs. Whether you use them at the workbench or for jobs around the house, revolutionary one-handed QUICK-GRIP clamps provide an easier, faster way to help complete your projects (which means you can start on the next one even sooner).

©1998 AMERICAN TOOL COMPANIES, INC.

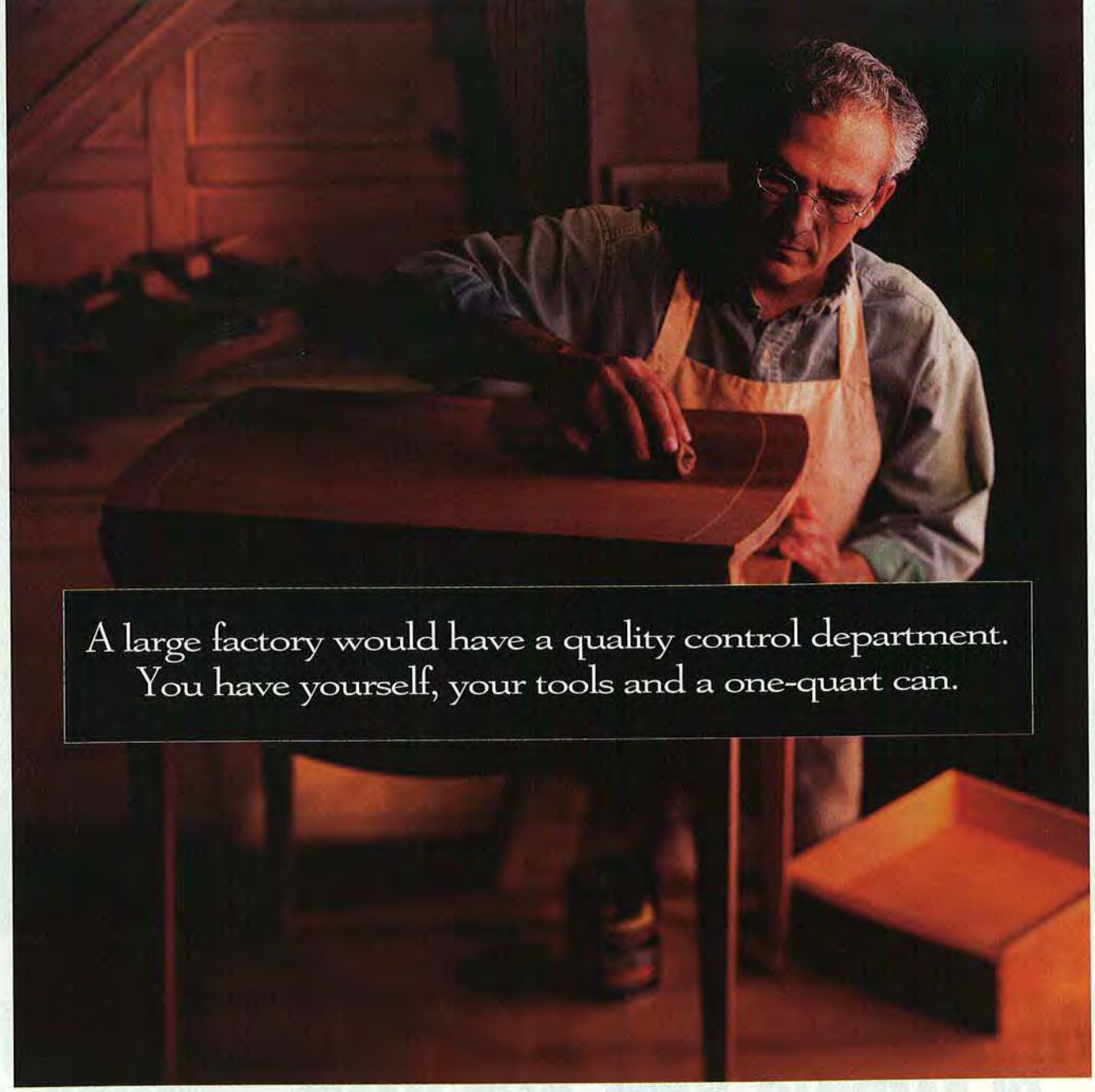

A large factory would have a quality control department. You have yourself, your tools and a one-quart can.

You've arrived at that moment. The design, the joinery, every surface on the piece is just the way you'd envisioned. Now it's time to bring it to life. Make it look as good as it did in your mind. Protect it for years to come.

When you open that can, it's reassuring to know that you're not alone. That our reputation is right there on the line with yours, at this moment of truth.

Olympic® Interior Products are a group of professional quality stains and finishes that give you more control during that final step in the process. We've engineered these stains with our exclusive *Absorption Control*™ formula, so you won't have to contend with blotching or streaking or lap marks.

Top off your work with *Olympic*® Antique Oil Finish or your choice of Oil or Water Based Polyurethane, engineered with our *Smooth Flow*™ formula and you've created a piece that begs to be touched. Call 1-800-441-9695 for a retailer near you.

OLYMPIC
INTERIOR PRODUCTS

Visit us at www.olympic.com.

Ornamental turnery from the days of Queen Victoria

Turning Back the TIMES

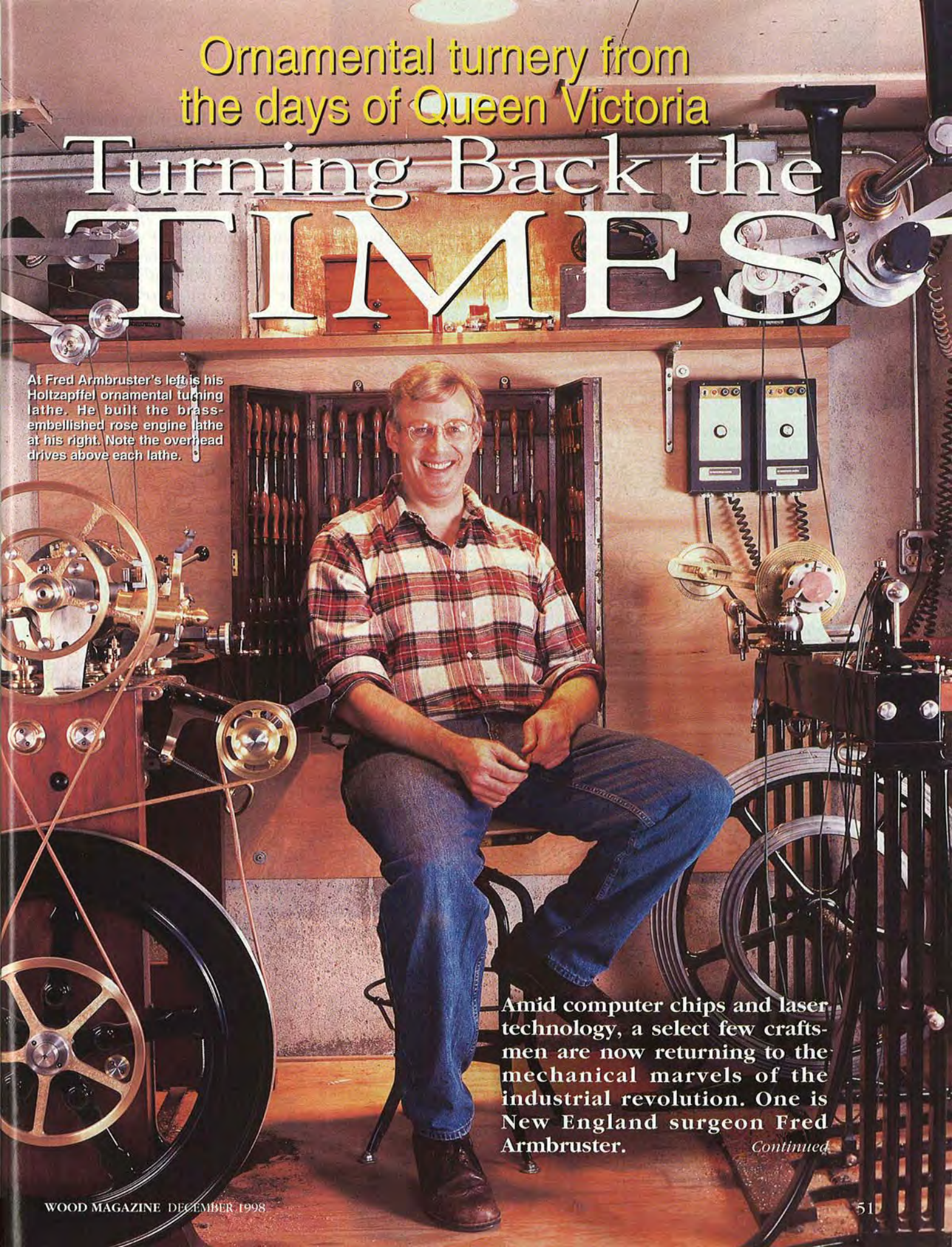

At Fred Armbruster's left is his Holtzapffel ornamental turning lathe. He built the brass-embellished rose engine lathe at his right. Note the overhead drives above each lathe.

Amid computer chips and laser technology, a select few craftsmen are now returning to the mechanical marvels of the industrial revolution. One is New England surgeon Fred Armbruster.

Continued

Turning Back the Times

Print this article

It takes a special type of person to grasp and enjoy the elements of ornamental turning—a type of turning that requires a very unique lathe. A keen interest in mechanics is important, as well as an eye for detail and a sense of artistry. Unusual combinations? Perhaps. But you'll find these traits in Fred Armbruster, 45, a retina surgeon who makes his home in New England. He has taken to this 150-year-old craft like a Labrador retriever to waterfowl hunting.

Born to tinker with an ornamental lathe

"My parents say that as a little kid I was a constant embarrassment," says Fred, amused at the memory. "I had the run of the neighborhood and regularly visited garages to bring home tools. I had a real cache—at least until I had to give them back. So tools have always fascinated him. I made them when I couldn't afford them. And I made furniture when I couldn't afford to buy it."

With that background, ornamental turning was a natural. "It combines my interest in precision metal work with my fascination with art," explains Fred.

Fred's interest in the craft was sparked by an article he read in a woodworking magazine 20 years ago. It showed the exquisitely decorated chalices, boxes, and vessels that are possible to make on an ornamental turning lathe. But most of all, he was captivated by the machine.

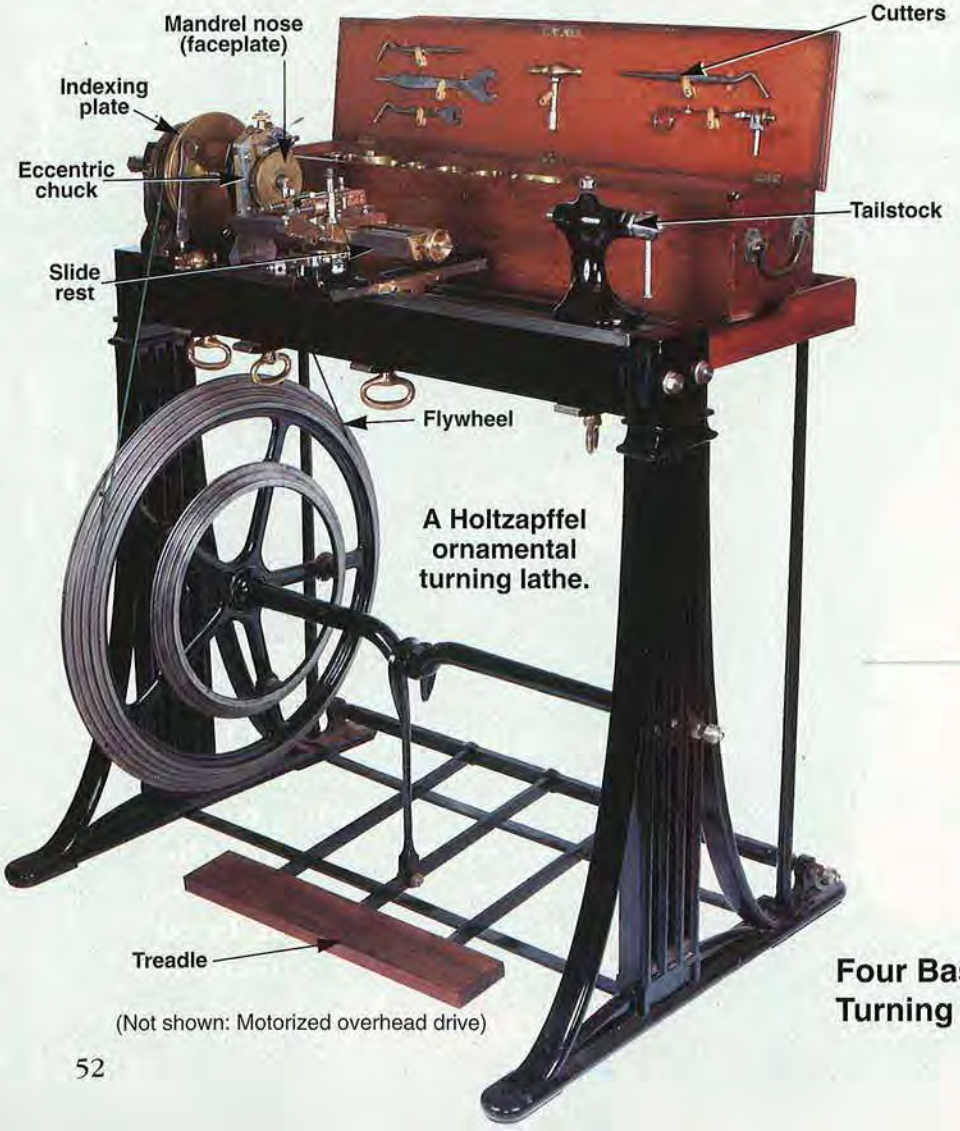

A Holtzapffel ornamental turning lathe.

(Not shown: Motorized overhead drive)

A magical machine with English lineage

An ornamental turning lathe starts out as a simple woodturning lathe. However, the decorative embellishment of an otherwise plain, round object not possible with an ordinary lathe is made possible by loads of attachments. The primary ones are an indexing plate, a slide rest, and an overhead drive for powering cutting tools (see diagram *lower left*).

The plate, mounted on the front of the pulley, has rows of holes into which you can insert a fixed pin to hold the mandrel in a given position. You then can make precise cuts on a stationary workpiece, and space them evenly by moving from hole to hole. The slide rest firmly holds the cutting tool and provides a mechanical means of positioning it. The overhead drive allows you to power rotating cutters with any orientation to the work, at any position.

With ornamental turning lathes you can do four basic motions, as shown in the drawings *below*:

1. *Plain turning* with a hand-held, hand-guided tool applied to the rotating workpiece.
2. *Index turning* with the workpiece held at incremental index points while a spinning cutting tool is applied to it.
3. *Cutting as both the work and the tool turn simultaneously* to produce spiral turning, fluting, and other decorative cuts.
4. *Lateral turning* as the work turns and at the same time moves

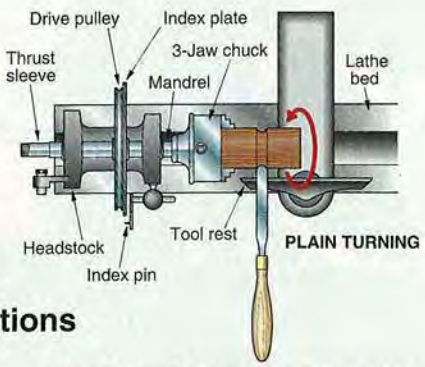

Four Basic Turning Motions

laterally by means of the traversing mandrel while the cutting tool remains fixed or in motion. This produces threads and rosettes.

Fred wanted one of the ornamental turning lathes when he first read about them. At the time, though, his intern's salary decreed postponement. A dozen years went by before Fred's dream of the lathe came true. Then a practicing surgeon, he had meanwhile joined the Society of Ornamental Turners to learn more of the machines.

Through the society, he located a lathe for sale in England. It was a Holtzapffel, a brand considered to be the finest ornamental turning lathe ever manufactured.

"Machines like this are from a time when a tool was an end unto itself, not just a means to an end," he says, glancing at his gleaming Holtzapffel. "It's No. 1520, and was built in 1835. The quality of it makes the lathe so fascinating—it's a work of mechanical art."

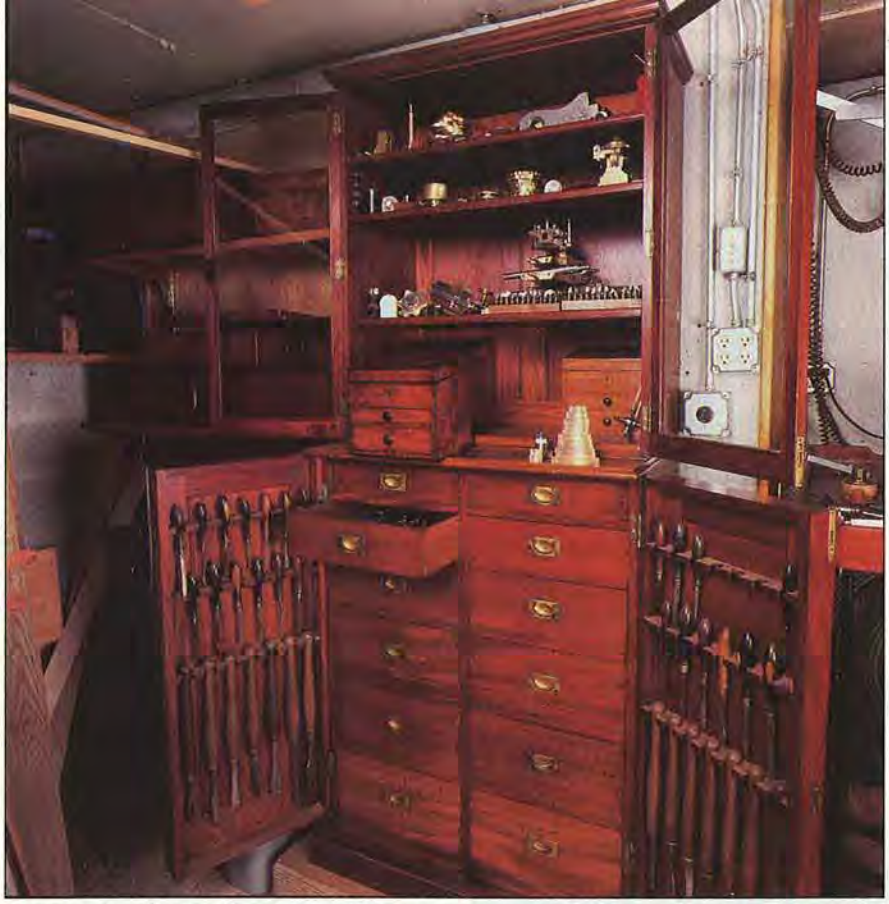

Each ornamental lathe came with an assortment of drills and cutters in a solid mahogany, brass-trimmed cabinet.

A Holtzapffel without all the parts

Fred's Holtzapffel was hardly complete when he obtained it. However, with help from people in the society, and by buying items at auction, he was able to restore his to almost its original form. "One of the most complete original outfits I've heard about recently changed hands for almost $100,000," he says. "Most people can't spend that much on a hobby, particularly at one time. I couldn't pay that much either, but with tenacity and patience, I was able to get all original parts over 5 to 6 years."

In 1990, Fred heard about another type of ornamental turning machine called the rose engine lathe, so named because it uses circular cams (called rosettes) to produce decorative patterns. Rose-engine-decorated objects first appeared in the 1500s. Holtzappfel and others built rose engines in small quantities up to recent times. Like all original ornamental lathes of the time, it was powered by a treadle, but differed because the headstock could rock back and forth, and the mandrel could travel to the right and left, following the contours on the face and edge of the rosettes.

A talented metal worker and machinist, Fred set out to make a replica of the rare machine. Patterning it after an original owned by a fellow turner, it took him five years to build. "Rose engine lathes cost about 350 English pounds in the early 1800s," notes Fred, "and for that price you could buy a block of flats in a fashionable section of London. So you can imagine what they're worth today, if you can even find one."

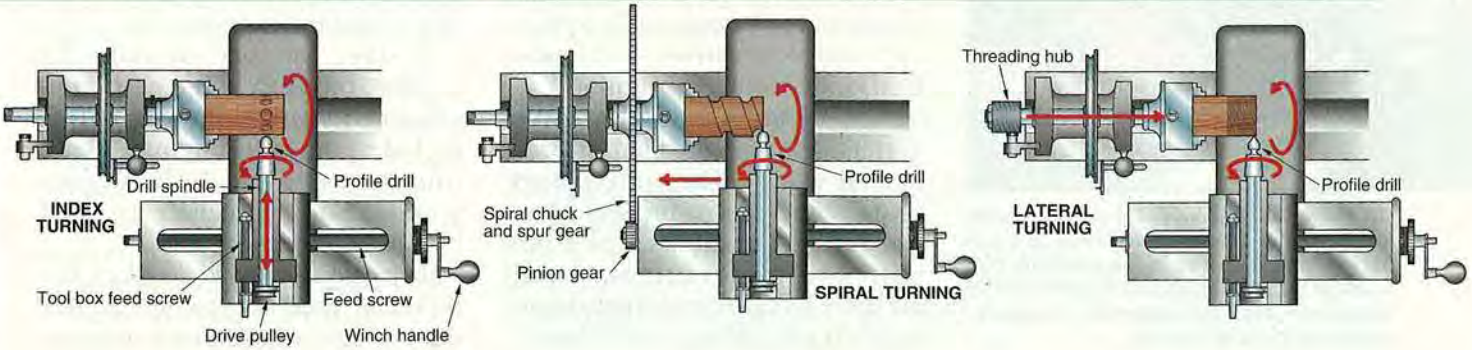

Fred starts by using a form tool to produce a bead molding on the face of the workpiece. He feeds the sharp cutting tool into the work by hand as the lathe mandrel rapidly revolves.

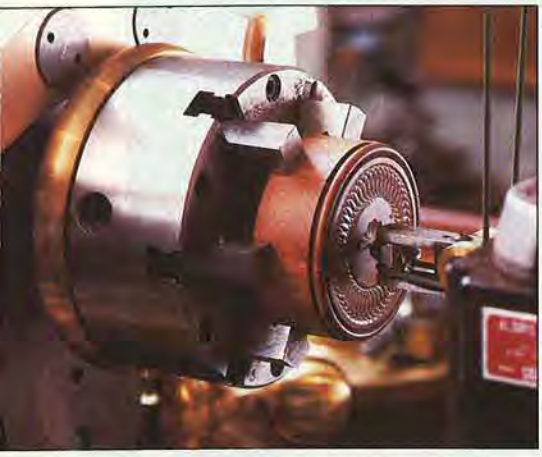

Here, the cutting tool revolves while the workpiece revolves and rocks to the right and left under the control of a circular cam (rosette), which transfers its shape to the workpiece.

To make this border pattern on the side of the workpiece, Fred switches to a different rosette and as in the previous cut, uses a motorized apparatus above the lathe to rotate the cutter as the workpiece revolves and rocks.

Turning Back the Times

Turnings by Fred Armbruster: from left, spiral-lidded box, African blackwood; tall chalice, African blackwood and Corian; small box, African mopane.

Five turnings by Jon Saver: from left, kingwood; African blackwood and Corian; Osage orange with African blackwood; African blackwood; Diamond wood (laminated birch).

Ornamental turning lathes such as Fred's are heavy. But even his—with its solid mahogany and glistening brass—is portable. "Since they were delivered by horse and carriage, then assembled on the premises, they were made to be easily disassembled," he notes. "I put my rose engine lathe together just like Holtzapffel did—with bolts. Even the wood joints are bolted, not glued."

In ornamental turning, accessories were fashionable

Looking around Fred's turning workshop, your eye is drawn to a tall, exquisitely crafted, mahogany cabinet. Anticipating the question, Fred says, "That holds the lathe's accessories.

"Just like buying any major machine today, what came with this one was what you were willing to buy," he continues. "You could go for a plain lathe for ordinary woodturning, or you could opt for the ornamenting chucks—an eccentric chuck, an elliptical chuck, a rectilinear chuck, and a dome chuck. You could purchase an ornamental slide rest with or without attachments to do spirals, curvalinear profiles, automatic feed, and automatic counting."

What about the turning tools, or cutters, as they're called in ornamental work? "The cutters were sold in small sets or big sets," Fred replies. "A typical set was a box with 14 dozen cutters, which means 14 different cutter shapes with a dozen sizes in each shape."

Although his accessory cabinet is impressive, Fred feels certain that it was considered fairly standard. "It would have been a good basic to mid-range outfit. On top-of-the-line cabinets, there was often a mirror in the back to make it look even more impressive."

Materials and techniques for intricate cuts

In Victorian times, there was an infatuation with decoration. The ornamental turning lathe made all kinds of decoration possible on candlesticks, chalices, vases, bowls, and snuff boxes. The materials, though, varied from those used on traditional lathes.

Because the stock must accommodate the intricate cuts made in ornamental turning without splitting or splintering, its texture must be fine and its grain dense. Also, because sanding the delicately decorated surface removes the sharpness of the cuts, it wasn't done. That's one reason that, at the height of its popularity, elephant ivory was the favored material. As newly discovered wood began to be imported, some of it suited the purpose, too.

Today, the use of ivory is banned, but Corian is a good substitute. Popular wood species include grenadillo, lignum vitae, purpleheart, and Indian rosewood. Ebony is usually avoided because it dulls the tools.

"Because the wood or ivory traditionally used in ornamental turning wasn't—and still isn't—always

Rose engine turnings by Dale Chase: African blackwood with pink ivory.

Rose engine turnings by Paul Fletcher: left, sycamore with pink ivory inlay; right, African blackwood.

available in large blanks, most decorated pieces are made up of smaller ones," Fred explains. "A tall chalice may have a separate top, a finial that screws on, and a separate stem and base, but it looks like a single piece. It's a far better strategy to build a vessel from pieces than to try and make it onepiece—it allows you more approaches to each component for the ornamenting tools. Besides, there's the very real chance that you could mess up. Then, you wouldn't lose the whole piece, only a component."

Most ornamental turners, according to Fred, use a regular lathe or a metal lathe to produce the object they'll decorate. "When they transfer it to the ornamental lathe, the round object must be centered on the axis of the lathe mandrel," the doctor comments. "There are countless ways to do that. In fact, a friend has a Holtzapffel that came with 34 different chucks!

"For a cylinder, though, the simplest way is to cut a tapered tenon on one end of the cylinder and tap it into a brass chuck or a matching turned recess in a wooden chuck screwed onto the mandrel nose. It's like a round tenon and mortise."

To demonstrate, Fred selects a small, round box turned from mopane (wood from a South African scrub tree not valuable in commerce). "Because the piece is not very tall, I can turn it like faceplate work, using standard metal chucks to hold it in place," he notes. For what Fred does next at the lathe, see the photos on the *opposite page.*

So who does ornamental turning?

"The Society of Ornamental Turners attracts doctors, businessmen, tradesmen, housewives, retired bankers, to name a few," Fred says. "I guess they all share a like fascination and interest in things mechanical. On the other hand, those who seem to produce the most attractive objects have the least mastery of the equipment. They jump through lots of hoops to get what they make."

By Fred's own admission, he jumps through hoops, too. His artistic talent, though, continues to boost him through.

The Amazing Holtzapffel Heritage

German engineer John Jacob Holtzapffel developed his ornamental turning lathe in the late 1700s. Prior to that time, any ornamentation to a turned object—which was popular among the royalty and gentry—had to be applied by fixed tools. But in his London machine shop, Holtzapffel invented a lathe with an overhead drive that operates in a manner similar to today's dental drill. To go with it, he also designed a host of revolving cutters that fit in a sliding rest.

From 1795 to 1914, John Jacob Holtzapffel's firm (later headed by his inventive son, grandson, and other family members) manufactured about 2,400 lathes, but probably most were not ornamental. The Holtzapffels also produced many other metal, everyday objects—from candleholders to pruning shears to fly-tying vises. It was their amazing ornamental lathes, though, that were sought by their wealthy patrons, and which have become so collectible because each was numbered and the name of its purchaser recorded.

The Holtzapffels also customized their lathes for wealthy clients. Fred says, "If you could afford it, one of the Holtzapffel workmen would come to your premises and teach you how to use it—or teach your footman how to sharpen the cutters!"

Interested in learning more about ornamental turning?

Members of the two ornamental turning societies listed can direct you to lathes, lathe parts, and skilled help. Write: Ornamental Turners International, Tom Howard, 1550 Homestead, Walnut Creek, CA 94598-1336; or, Society of Ornamental Turners, Hon. Sec. Nicholas S. Edwards, 188 Bromham Rd., Bedford, Bedfordshire, UK 40 4BP

Written by Peter J. Stephano with Larry Clayton Photographs: John Kane/Silver Sun Studio Drawings: Kim Downing

AT-YOUR-SERVICE

Steamer Trunk

You don't have to travel afar to enjoy the good looks of this curvaceous project. Reminiscent of trunks used a century ago, this finely crafted piece offers ample storage. Top it with glass for a stunning coffee table.

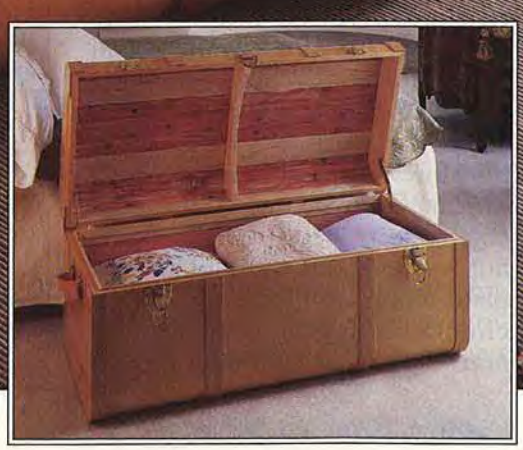

Print this article

To make this project, I used several thicknesses of solid stock and ⅛" bending plywood. For the interior, I choose aromatic cedar. To find this diverse stock, see the Buying Guide for our source of the hardwood kit. We've also listed our sources for the hardware and necessary router bits.

Jan Svec
Assistant Design Editor

Start your trunk with the end panels

1 Cut the two end panels (A) to the size listed in the Bill of Materials from ¾" birch plywood. Mark and cut (we used a bandsaw) a 3" radius on each corner where shown on the Exploded View and End Panel drawings. Sand the round corners.
2 Rout a ⅛" rabbet ½" deep along the inside face of each plywood end panel (A). (We used a rabbeting bit fit with an oversize bearing. See the Buying Guide for our source.)
3 Using the Recess Template drawing on the *WOOD PATTERNS®* insert in the middle of the magazine for reference, make a ¾"-thick template like the one shown.
4 Clamp the template flush with the shoulders of the adjacent rabbets on an end panel where shown in *Photo A*. Fit your router with a ½" pattern bit, and follow the template with the router bit to rout a pair of recesses on the inside face of the end panel where shown in *Photo A*.

Clamp the template in place, and rout the recesses. Reposition and rout until all eight recesses have been formed.

5 Clamp the template over another corner of the end panel, keeping the same corner of the template out. Rout another pair of recesses. Continue this process until you've routed all eight recesses.
6 Slide the fence on your tablesaw 4 11/16" from the inside edge of your saw blade, and rip each end panel in two where shown on the End Panel drawing.

Next, let's add the rib and rails to join the end panels

1 Cut a piece of ¾" birch to 4¼×19¾" for the rib blank (B). Transfer the full-size rib half pattern from the pattern insert. Cut the rib to shape. The top of the rib should be the same shape as the top rabbeted edge of the end-panel tops.
2 Cut the rails (C) to size (same width as the recesses). Cut the half rails (D) to size plus ¼" in width.
3 Rout ¼" round-overs on the inside face of each rail (C, D) where shown on the Carcase drawing.
4 Fit the half rails (D) into the recesses to check the fit. Mark a cutline, and rip each half rail so its top edge is flush with the top edge of the end panel.
5 Clamp the rails (C, D) between the end panels (A). Position the top rib (B), and clamp it in place. Drill mounting holes, and glue and screw the rails and rib in place.

Wrap the frames with bending plywood

1 Cut the skin blanks (E, F) to the sizes listed in the Bill of Materials from a sheet of ⅛" birch bending plywood. Lay out the pieces so the grain on the lid will mate with the grain on the base at the trunk front when the lid is closed later.
2 Mark centerlines on the outside (good) face on the ends of each skin blank. Mark mating centerlines on the outside face of the end panels (A) where shown on the Carcase drawing.
3 From ½" or ¾" plywood or particleboard, cut two clamp blocks to 10×40" (for the inside of the box) and two more that measure 10×44" (for the outside of the box).
4 Turn the trunk base upside down on a workbench, and spread white glue on the bottom rails and bottom rabbeted edges of the end panels. (Due to the involved glue-ups, we used white woodworker's glue to extend working time.)
5 Apply the bottom skin (E) to the base frame, aligning the centerlines on the skin with those marked on the frame. Starting from the center and working out, staple the skin to the end panels. (We used a hand staple gun and ½" staples.) Locate the staples so they'll be covered by the bands later. Turn the base right side up, spread glue on the side ribs and rabbets, and use the clamp blocks to clamp the skin tightly to the frame as shown in *Photo B*. Weight the bottom rails to hold them firmly to the skin while the glue dries. Wipe off any excess glue with a damp cloth.
6 Use the same process to glue the top skin (F) to the lid frame. (We used a pair of 2×43" clamp blocks clamped along the outside edges of the lid to hold the plywood skin tightly against the half rail.)
7 Later, remove the clamps from both assemblies, and trim the

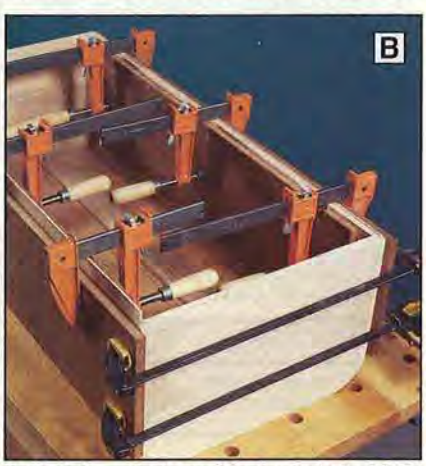

Particleboard clamp blocks help hold the bending plywood tightly against the base frame while the glue dries.

Continued

Steamer Trunk

excess plywood skin flush with the half rails. (We used a router with a flush-trim bit to do this.)

Say no to raw plywood edges with banding strips

1 To hide the plywood edges on the mating edges of the base and lid, cut and miter-cut the eight banding strips (G, H) to size. Make sure the width of the front and back banding (G) is equal to the thickness of parts D and E, and that the side banding is as wide as the thickness of the plywood panels A.
2 Glue the solid-stock banding to the base and lid where shown on the Carcase drawing.

Cut and add the trim pieces

1 Cut the trim pieces (I, J) to the sizes listed in the Bill of Materials.
2 Cut the vertical trim pieces (I) in two; one for the base and another for the lid. Number the mating pieces I so the grain will match from one piece to the next when you apply the pieces.
3 Glue the trim (I, J) in place flush with the outside edges of the trunk. Trim and sand the ends of trim pieces (I) flush with the end panels (including the radiused ends).

Build a form, and laminate the curved banding

1 Build the form shown on the Band Bending Form drawing on the pattern insert in the middle of the magazine. Mark a centerline on the top outside face.
2 To keep the laminations from sticking to the form, seal the porous edges of the form with polyurethane. After the poly dries, sand lightly and apply waxed paper or plastic wrapping tape to the edges.
3 Cut 16 1/16×2×48" birch strips for the bottom banding (K) and 16 1/16×2×33" birch strips for the top banding (L). See the resawing technique article in the previous issue for reference. Mark a centerline on one edge of each strip.
4 Spread a thin even coat of glue on the mating surfaces of four strips. Stack them together, and position them on the bending form, keeping the centerlines on the strips within 1/4" of the centerline on the form.

Continued

CUTTING DIAGRAM

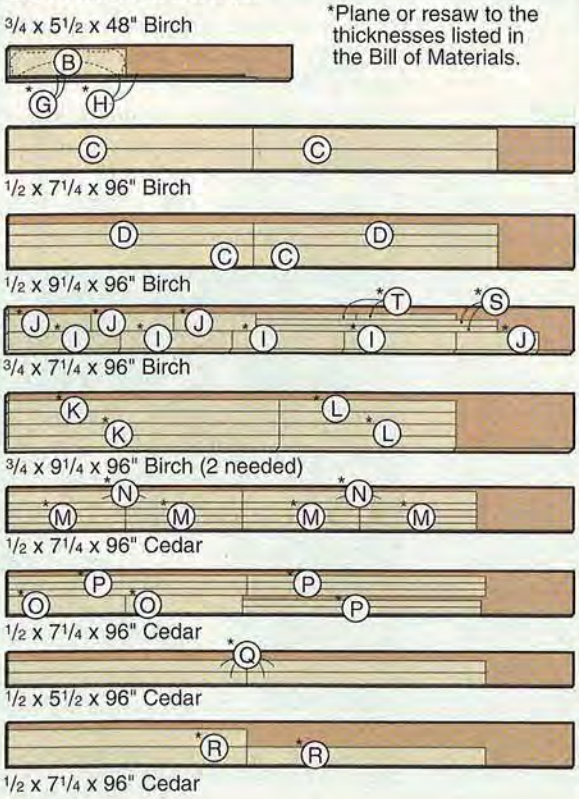
3/4 x 5 1/2 x 48" Birch
*Plane or resaw to the thicknesses listed in the Bill of Materials.
1/2 x 7 1/4 x 96" Birch
1/2 x 9 1/4 x 96" Birch
3/4 x 7 1/4 x 96" Birch
3/4 x 9 1/4 x 96" Birch (2 needed)
1/2 x 7 1/4 x 96" Cedar
1/2 x 7 1/4 x 96" Cedar
1/2 x 5 1/2 x 96" Cedar
1/2 x 7 1/4 x 96" Cedar

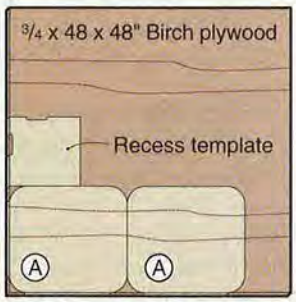

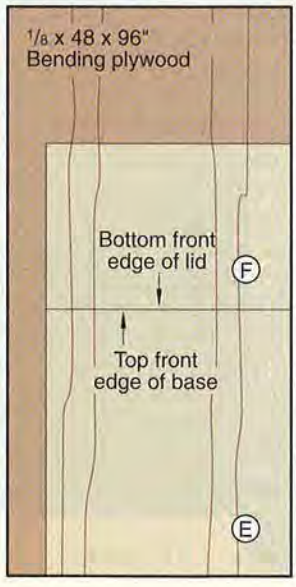

Bill of Materials

Part	Finished Size T	W	L	Matl.	Qty.
CARCASE					
A end panels	3/4"	18"	20"	P	2
B top rib	3/4"	4 1/4"	19 3/4"	B	1
C rails	1/2"	3 1/2"	41 1/2"	B	6
D* half rails	1/2"	1 11/16"	41 1/2"	B	4
SKIN AND BANDING					
E* bottom skin blank	1/8"	41 1/2"	46"	BP	1
F* top skin blank	1/8"	41 1/2"	29"	BP	1
G banding	1/16"	5/8"	42"	B	4
H banding	1/16"	5/8"	20"	B	4
TRIM					
I* vert. trim	1/4"	3"	18"	B	4
J horz. trim	1/4"	3"	14"	B	4
K* btm. bands	1/4"	1 3/4"	48"	LB	4
L* top bands	1/4"	1 3/4"	33"	LB	4
LINING PIECES					
M lining pieces	3/8"	1 1/16"	19 7/8"	C	16
N lining pieces	3/8"	2"	19 7/8"	C	4
O lining pieces	3/8"	3"	19 7/8"	C	2
P lining pieces	3/8"	1 1/16"	40 1/2"	C	8
Q lining pieces	3/8"	2"	40 1/2"	C	4
R lining pieces	3/8"	3"	40 1/2"	C	3
S front & back lips	1/4"	1"	40 1/2"	B	2
T side lips	1/4"	1"	18 3/4"	B	2

*Initially cut parts marked with an * oversize. Trim to finished size according to the instructions.

Materials Key: P–birch plywood, B–birch, C–cedar, BP–bending plywood, LB–laminated birch.

Supplies: 32–#8×2" flathead wood screws, 20–#8×1/2" roundhead brass wood screws, 20–#8×3/4" roundhead brass wood screws, 22–#8×3/4" flathead brass wood screws, 10–#8 brass finish washers, 1/4" staples, 1/2" staples, and clear finish.

Buying Guide

Router bits. Rabbet Master plus rabbeting set (includes 7 bearings and one bit), 1/4" shank, #600-639, $38.90 or 1/2" shank, #600-640, $39.90; 1/2" top-bearing pattern bit, #612-127B, 1/4" shank, $27.30; 1/4" round-over bit, 1/4" shank, #638-254, $29.90; chamfer bit, 1/4" shank, #636-190, $27.40. Jesada Tools, 310 Mears Blvd., Oldsmar, FL 34677 or call 800/531-5559. Internet access at www.jesada.com
Hardware kit. 4 bump glides, S1768B, $.60 each; 2 handles, S3671N, $2.15 each; 4 handle loops with pegs, S3605B, $1.15 each; 4 stop hinges, S1769B, $1.41 each; 1 lift pull, S3679N, $4.35 each; 2 draw bolts, S1772B, $2.77 each; 2 trunk stays, S527B, $1.31 each. Van Dyke Supply, 4th Avenue and 6th Street, Woonsocket, SD 57385 or call 800/558-1234.
Hardwood kit. All the individual pieces shown on the Cutting Diagram cut oversized from the thickness and species listed in the Bill of Materials. Kit No. W1102, $269.95 ppd. Heritage Building Specialties, 205 North Cascade, Fergus Falls, MN 56537. Call 800/524-4184 to order.

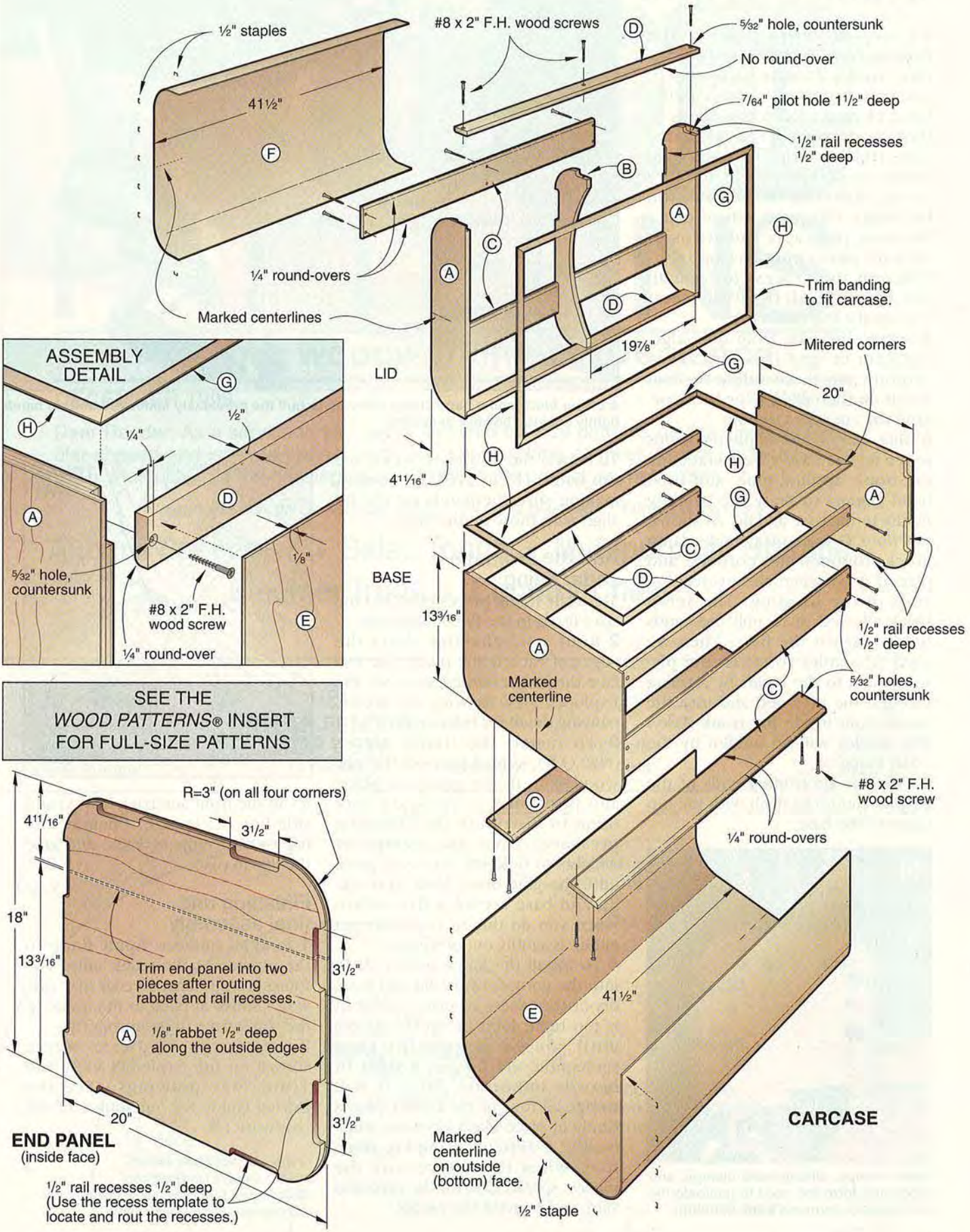
½" staples
41½"
F
#8 x 2" F.H. wood screws
D
5/32" hole, countersunk
No round-over
7/64" pilot hole 1½" deep
½" rail recesses ½" deep
B
G
A
C
H
¼" round-overs
Trim banding to fit carcase.
Marked centerlines
19⅞"
Mitered corners
LID
20"
4¹¹/₁₆"
BASE
13³/₁₆"
Marked centerline
½" rail recesses ½" deep
5/32" holes, countersunk
#8 x 2" F.H. wood screw
¼" round-overs
41½"
E
Marked centerline on outside (bottom) face.
½" staple
CARCASE
ASSEMBLY DETAIL
¼"
½"
⅛"
5/32" hole, countersunk
#8 x 2" F.H. wood screw
¼" round-over
SEE THE WOOD PATTERNS® INSERT FOR FULL-SIZE PATTERNS
R=3" (on all four corners)
4¹¹/₁₆"
3½"
18"
13³/₁₆"
Trim end panel into two pieces after routing rabbet and rail recesses.
⅛" rabbet ½" deep along the outside edges
20"
END PANEL
(inside face)
½" rail recesses ½" deep (Use the recess template to locate and rout the recesses.)

Steamer Trunk

5 Clamp the strips firmly to the bending form as shown in *Photo C.* (We used a 2"-wide band clamp; you also could use two 1"-wide band clamps.) Keep the edges as flush as possible. Then add three cauls (thicker strips of wood) and sliding head-type clamps to more evenly distribute the pressure on the strips. (We used waxed paper between the cauls and strips to keep the pieces from sticking.)

6 Repeat the process to form all four bottom bands (K). Then repeat to form the top bands (L).

7 Scrape the glue from one edge, and joint or sand that edge. Then carefully rip the banding to final width on the tablesaw or bandsaw. Sand the cut edges smooth.

8 Glue, clamp, and staple the bands to the lid and base. (We marked the locations, applied glue, and used band clamps to draw the banding tightly to the base and lid. As shown in *Photo D*, we cut a scrap clamp block, rounded the corners, and placed it between the protruding ends of the banding. The scrap block allowed us to pull the bands tightly against the base. Then we used ¼" staples to fasten the plywood skin to the bands by stapling through the plywood and into the bands from inside the trunk base.) The staples will be hidden by the cedar lining.

9 Trim the protruding ends of the bottom bands (K) flush with the top edges of the base.

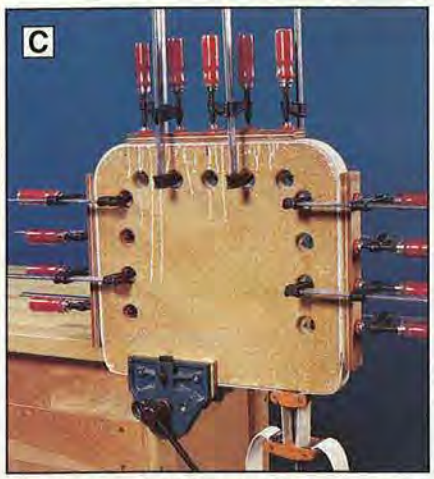

Band clamps, sliding-head clamps, and a bending form are used to laminate the thin strips to form the trunk banding.

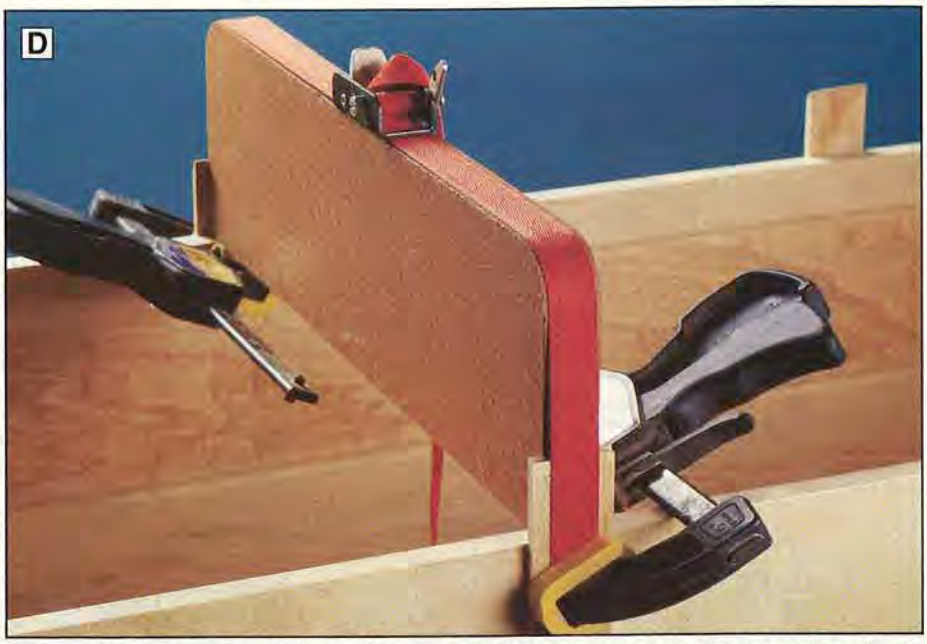

A clamp block and a band clamp allow us to pull the previously laminated bottom bands tightly against the base assembly.

10 Repeat the process to secure the top bands (L) to the lid assembly, making sure the bands on the lid align with those on the base.

Add the aromatic cedar lining

1 Cut the lining pieces (M–R) to the sizes listed in the Bill of Materials.

2 Rout a ⅛" chamfer along the edges of each lining piece that will face the inside of the trunk. See the Exploded View drawing and accompanying detail for reference.

3 To install the lining pieces (N,O,Q,R), spread glue on the plywood skin, fit the pieces in place, and position a scrap board over them to distribute the clamping pressure. Then use clamps or weights to hold the pieces in place until the glue dries. Make sure the lid and base are on a flat surface when you do this so you don't get either assembly out of square.

4 To install the lining pieces (M,P) into the corners of the lid and base, dry-fit the pieces in place. If the fit is too tight, joint or rip the pieces until you get a tight fit. Then rechamfer the pieces. A tight fit here is important since it will wedge all four of the corner pieces firmly in place like a keystone, eliminating a difficult clamping situation. When they fit, remove the pieces, spread glue on the plywood skin, and reinstall the pieces.

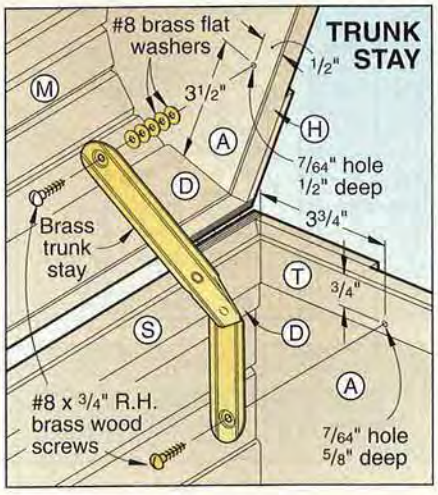

5 Cut the front and back lips (S) and side lips (T) to size. Chamfer the top outside edge of each, and glue the lips in place.

Finishing and final assembly

1 Sand all surfaces. Apply finish to the outside of the trunk only. The fumes from aromatic cedar may prevent a finish applied to the inside of the trunk from drying properly.

2 Attach the hardware where shown on the Exploded View and Trunk Stay drawings. (See the Buying Guide for our source of the hardware.)

Written by Marlen Kemmet
Project Design: Jan Hale Svec
Illustrations: Kim Downing; Lorna Johnson
Photographs: John Hetherington

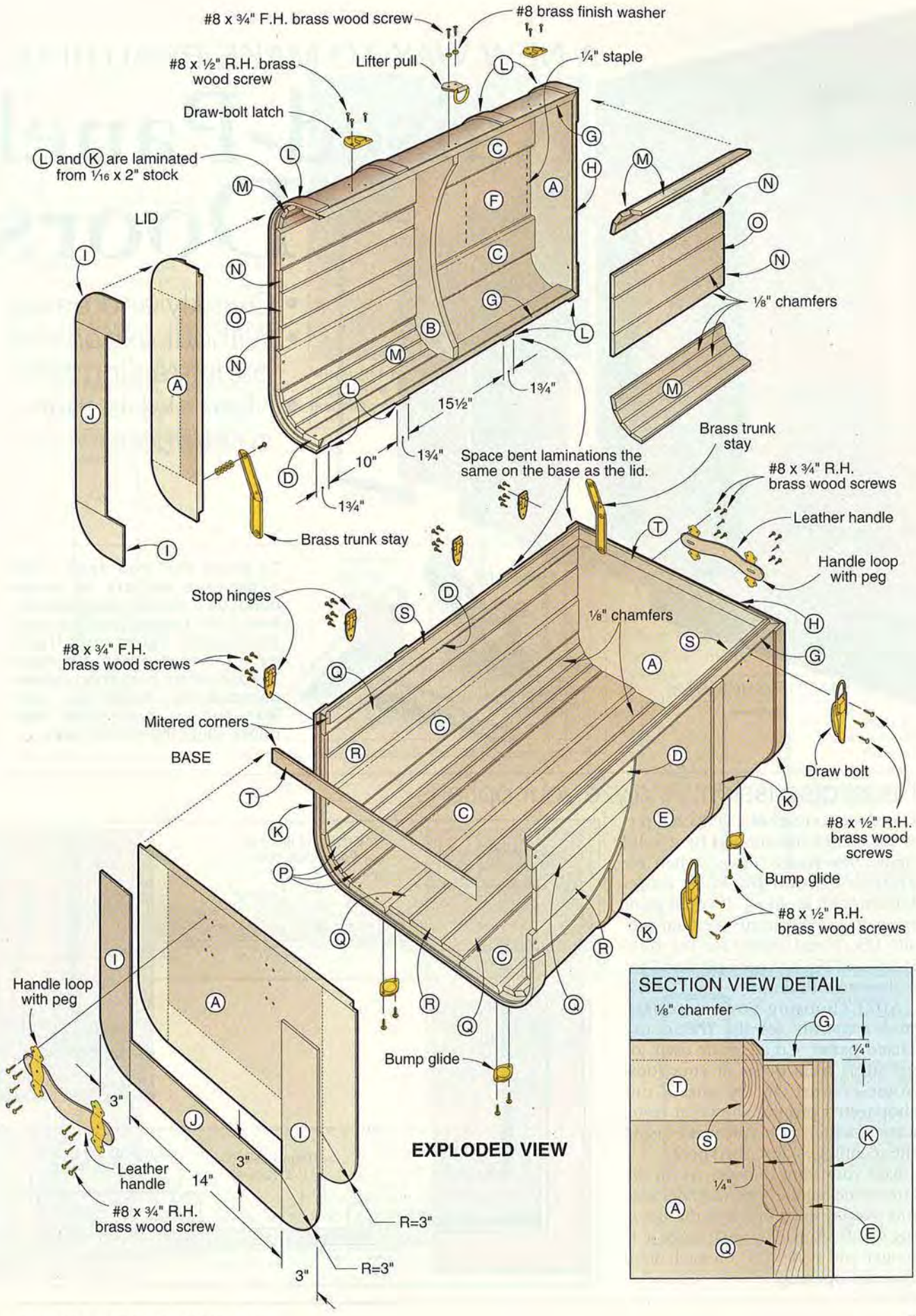
#8 x ¾" F.H. brass wood screw
#8 brass finish washer
#8 x ½" R.H. brass wood screw
Lifter pull
¼" staple
Draw-bolt latch
L and K are laminated from 1/16 x 2" stock
LID
⅛" chamfers
15½"
1¾"
10"
Space bent laminations the same on the base as the lid.
Brass trunk stay
#8 x ¾" R.H. brass wood screws
Leather handle
Handle loop with peg
Stop hinges
#8 x ¾" F.H. brass wood screws
Mitered corners
BASE
Draw bolt
#8 x ½" R.H. brass wood screws
Bump glide
Handle loop with peg
3"
14"
Leather handle
#8 x ¾" R.H. brass wood screw
R=3"
EXPLODED VIEW
SECTION VIEW DETAIL
⅛" chamfer
¼"

A NEW WAY TO MAKE BEAUTIFUL

Raised-Panel Doors

- Quickly and easily
- Without expensive panel-raising bits
- More stable than solid doors

To prove that you don't need expensive cutters to make handsome doors, we made the beautiful raised-panel doors *above left*, using only three common router bits. Because the panels are hardwood-veneer plywood, they weigh less, cost less, and are more stable than doors made from solid stock.

Panel discussion: Analyze your options

Our door consists of a veneered plywood panel surrounded by a solid frame. The panel "raises" when we apply a second plywood panel framed with molding. If you'll paint your doors, substitute medium-density fiberboard (MDF) for the solid stock and birch-veneer plywood for a glass-smooth finish.

After choosing your materials, pick a profile for the frame and raised panel. Create your own, or get ideas from doors at your local home center. Or, try one of our shop-tested profiles shown at *right,* any of which you can make using the techniques described here.

Base your door dimensions on the size of the cabinet opening. Because our overlay door overlaps the opening on all four sides, we'll make it 1" longer and wider (½" on each side) than the opening.

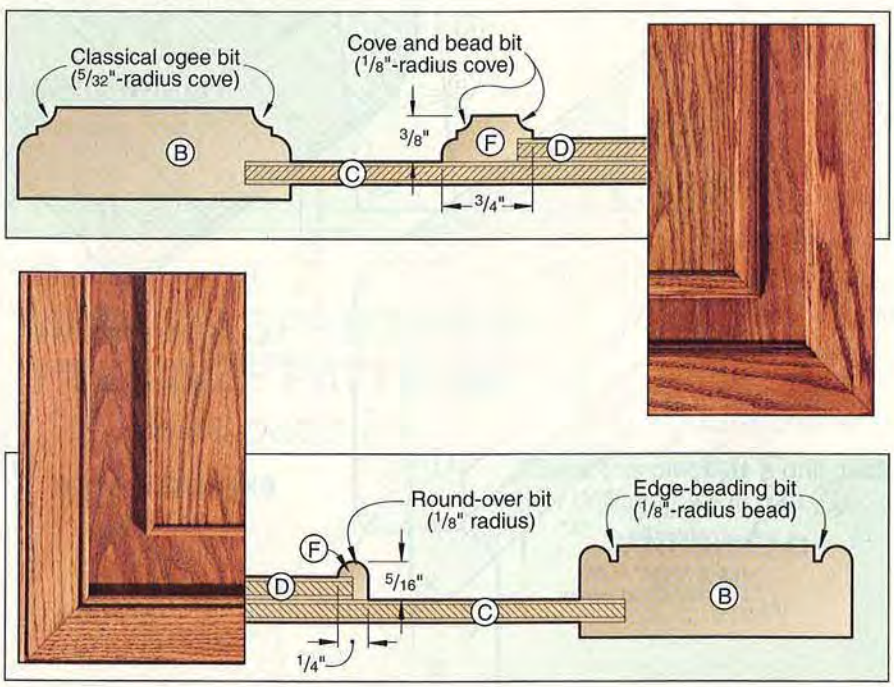

Print this article

Start with the frame

1 From ¾" stock, rip to 2¼" enough material for parts A and B. Don't cut them to length yet.

2 Set up your router table as shown in the Machining the Frame drawings *below*, and make Cuts 1 and 2.

3 Measure the exact thickness of your main panel (C), and make Cuts 3 and 4 on your tablesaw.

4 Cut the rails and stiles to length. Make them about ½" oversize first, then miter-cut to finished length. For repetitive cuts, use a stop on your fence, as shown at *right*.

You'll get more accurate results on repetitive miter cuts if you cut a matching miter on your stop.

MACHINING THE FRAME

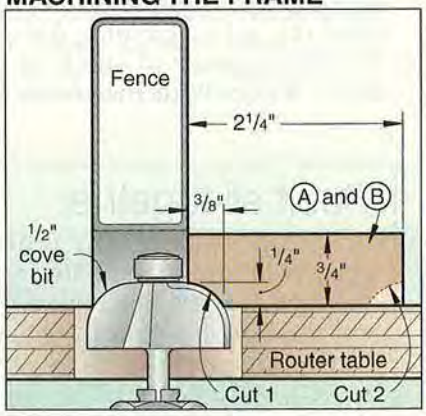

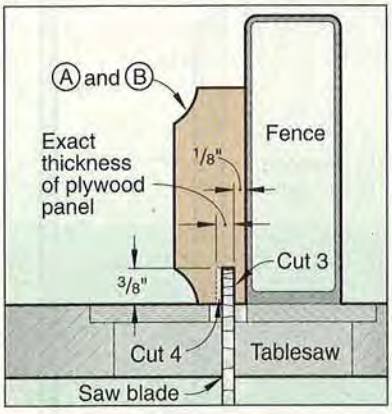

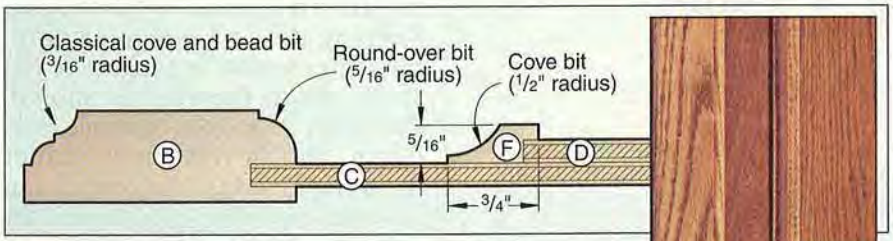

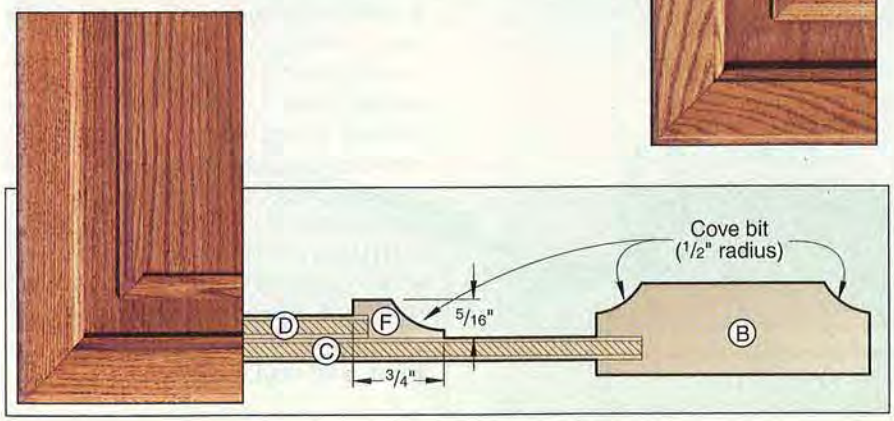

Now size and raise the panel

1 Subtract 3 11/16" from the frame height and width to find the size of part C, and cut it to size. Now, calculate the dimensions of part D by subtracting 8¼" from both frame dimensions. Cut part D to size.

2 On the face of part C, mark an outline 2¼" in from each edge. Glue part D to part C, just hiding the outline. Clamp or weight the assembly, and set it aside.

Let's make the molding

For safety reasons, mill the moldings (parts E and F) from a blank of stock, then rip off the molded edge. When the blank gets too small to handle comfortably (about 2" wide), continue with a fresh blank, or use a feather board to hold the blank against the rip fence.

1 Set up your router table as shown in the Machining the Molding drawings *below*, and mill one edge of your ¾" blank. With your tablesaw,

MACHINING THE MOLDING

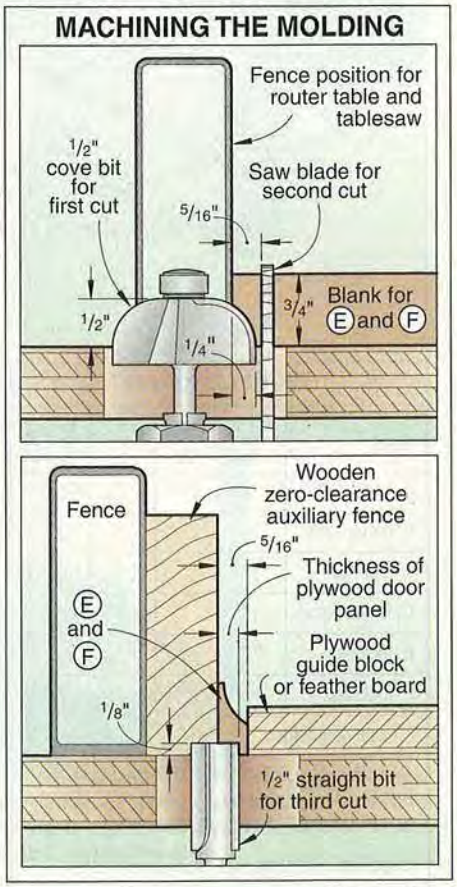

Continued

Raised-Panel Doors

EXPLODED VIEW

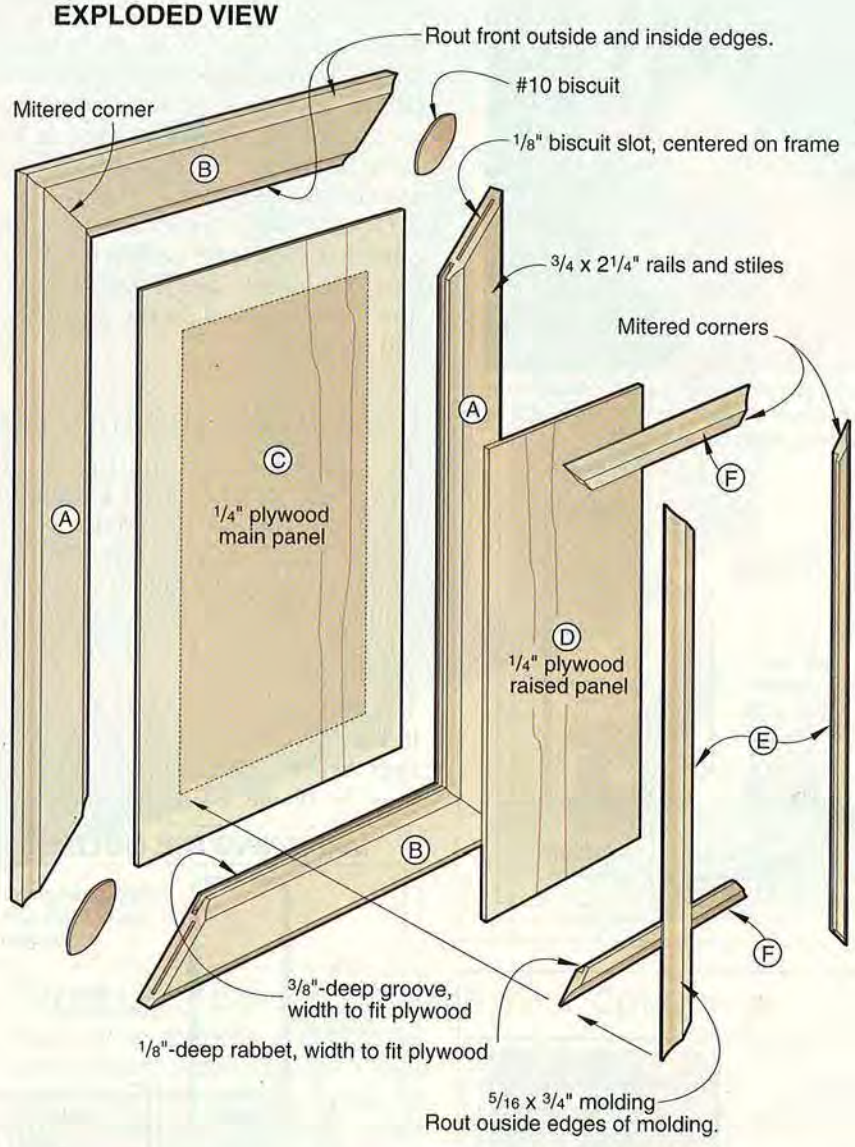

Bill of Materials

Part	Finished Size T	W	L	Matl.	Qty.
A frame rails	3/4"	2 1/4"	*	SS	2
B frame stiles	3/4"	2 1/4"	*	SS	2
C main panel	1/4"	*	*	HP	1
D raised panel	1/4"	*	*	HP	1
E moldings	5/16"	3/4"	*	SS	2
F moldings	5/16"	3/4"	*	SS	2

* To be determined

Materials Key: SS–Solid stock, HP–Hardwood plywood. For painted panels, use medium-density fiberboard (MDF) for all solid-stock parts.

Supplies: 4–#10 biscuits, stain, clear finish.

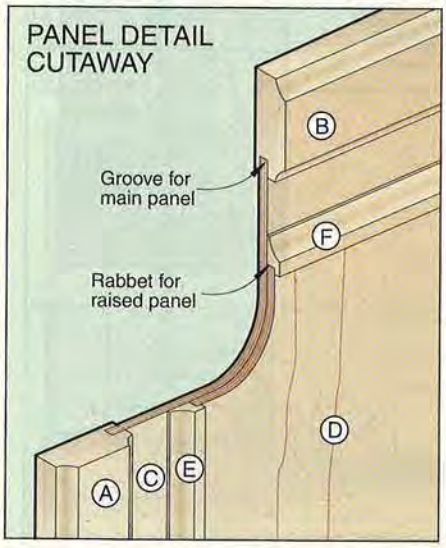

rip the molded edge, cove side down, to 5/16" (as shown in the photo at *right*). Use a zero-clearance insert and splitter on your tablesaw to keep the thinly cut molding in close contact with the outfeed end of the fence. Repeat this step until you have enough molding for your doors. (See "How to Make a Zero-Clearance Insert" in our October 1998 issue. For the splitter, continue the insert's kerf through the outfeed end of the insert. Sand a piece of hardboard to the thickness of the kerf, then sand a taper on the leading edge. Glue this piece into the end of the kerf.)

2 Set up your router table as shown in the bottom Machining the Molding drawings (on the *previous page*). Make the zero-clearance fence by attaching a piece of stock to your table's fence. With the router run-

Put it all together

1 Set up your router table as shown in the Biscuit-Slot Setup drawing at *right*. Sometimes you'll cut the biscuit slot with the stock faceup and sometimes facedown, so it's critical that the slot be dead-center on your stock. Make a few test cuts on scrap before you cut your door parts.

Feed part A into the slot cutter as shown *opposite far right*. Keeping the end in contact with the cutter's pilot bearing, slide the stock out to the stop as shown. Turn part A end-for-end and facedown, and in the same manner (short side against the fence), cut a slot in the other end. Repeat for the remaining parts A and B.

2 Glue #10 biscuits into the slots you just created. Complete the assembly by capturing the plywood panel in the four frame pieces. Using bar clamps and corner clamping blocks (see the Shop Tip on *page 42*), carefully clamp the assembly. Tighten each clamp a little at a time, keeping each joint perfectly aligned. If a joint slips out of alignment, loosen the clamps on that joint, adjust the joint, and reclamp.

A tall, narrow pushstick keeps your fingers far away from the blade when ripping thin molding from the blank.

ning, slowly move the fence into place, just cutting into the wooden fence. Rout the rabbet in parts E and F. To keep the molding firmly against the fence, clamp a feather board or guide block as shown in the photo at *right*.

3 Subtract ¼" from the length of part D. Miter-cut parts E using this length for the "short" dimension. Again, if you're making several panels of the same size, use a stop block to make consistent cuts. Repeat for parts F, subtracting ¼" from the width of part D.

4 Glue and clamp parts E and F to part C, covering the edges of part D. We used two spring clamps on each piece of molding, keeping the mitered joints tight. Remember to put a dot of glue in each of the miter joints.

The guide board extends past the router bit to prevent chatter and keep the workpiece in contact with the fence.

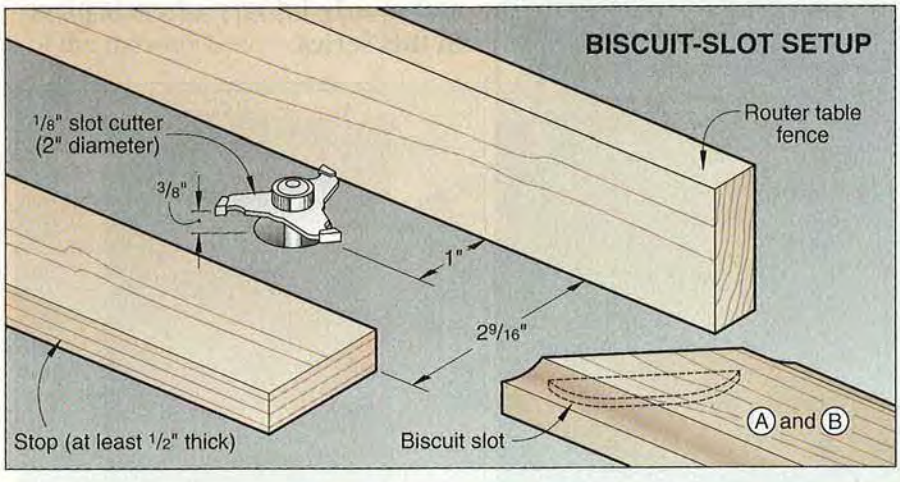

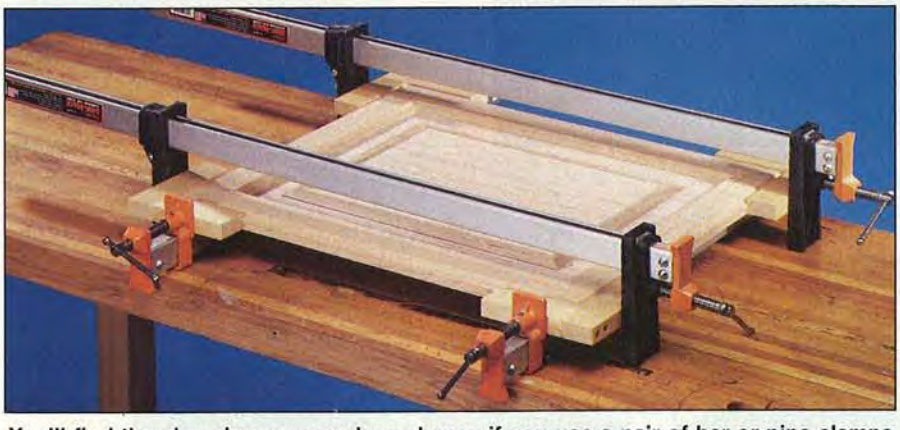

You'll find the clamping process less clumsy if you use a pair of bar or pipe clamps with extended-reach jaws.

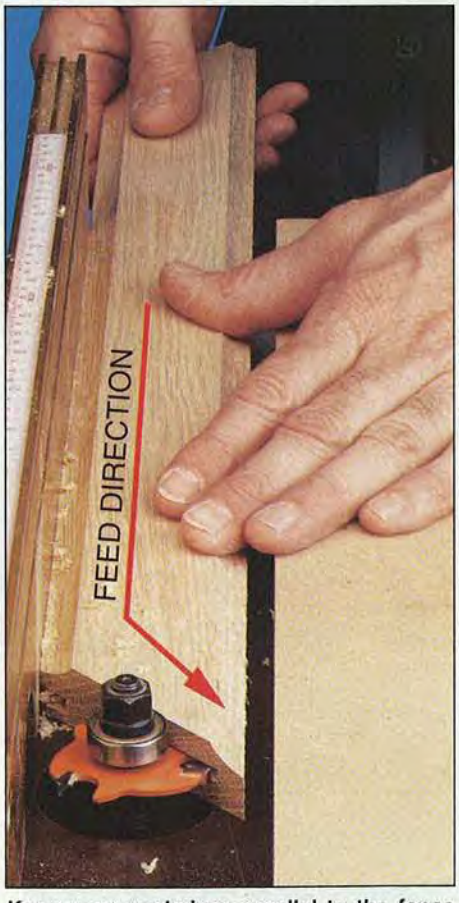

Keep your workpiece parallel to the fence and tight against the pilot bearing as you guide it out to the stop.

Written by Dave Campbell with Chuck Hedlund Illustrations: Kim Downing Photographs: Baldwin Photography

COUNTRY-FRESH

Is it time for a new bedroom set at your house? If so, here's the start of a five-piece ensemble we plan to showcase over the next year. In upcoming issues, we'll feature a dresser with mirror, a queen-size bed, and matching nightstands. Depending on the finish and hardware you select, these designs can work in both country and traditional decors. See the photo of the chest *below* for the latter version.

You'll appreciate the straightforward construction procedures and sturdy joinery of each piece in this series.

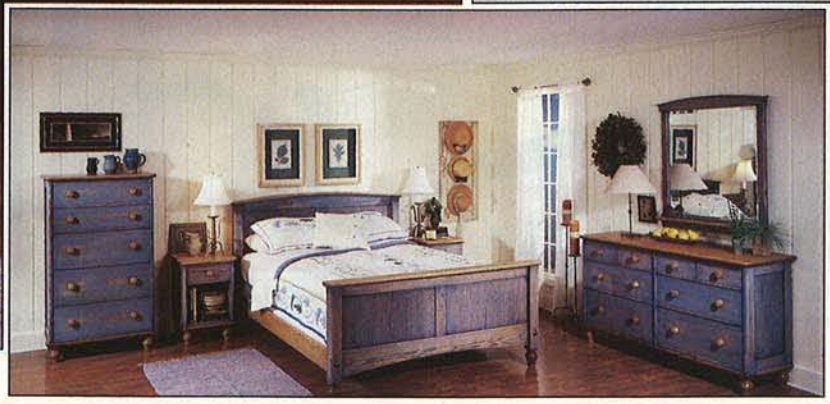

Print this article

Five-Drawer Chest

Let's start with the plywood carcase

1 From ¾" oak plywood (walnut or cherry would be equally attractive), cut the sides (A) and top, bottom, and shelves (B) to the sizes listed in the Bill of Materials and laid out on the Cutting Diagram.

2 Cut all the rabbets and dadoes in the sides (A) where dimensioned on the Side drawing on the Parts View in the *WOOD PATTERNS®* insert in the center of the magazine. (We cut the dadoes in the plywood sides on our tablesaw using the fence to ensure that the dadoes in the right-hand side piece aligned perfectly with those in the left-hand side piece. This ensures a proper fit of the drawers later.)

3 Using the Carcase Top Shelf on the Parts View drawing for reference, drill the holes and form the slots in the uppermost B. The slots allow the screws that secure the top (L) to the top shelf (B) to move as the solid-stock top expands and contracts. See the two details *below* for reference. Also drill the holes for the stops (T) now. Countersink each hole slightly for ease in locating it later.

4 Dry-clamp the carcase (A, B) together, checking for square. Drill and countersink the mounting holes centered over the rabbets and dadoes where shown on the Side drawing on the pattern insert. The trim will cover the screw holes later.

Continued

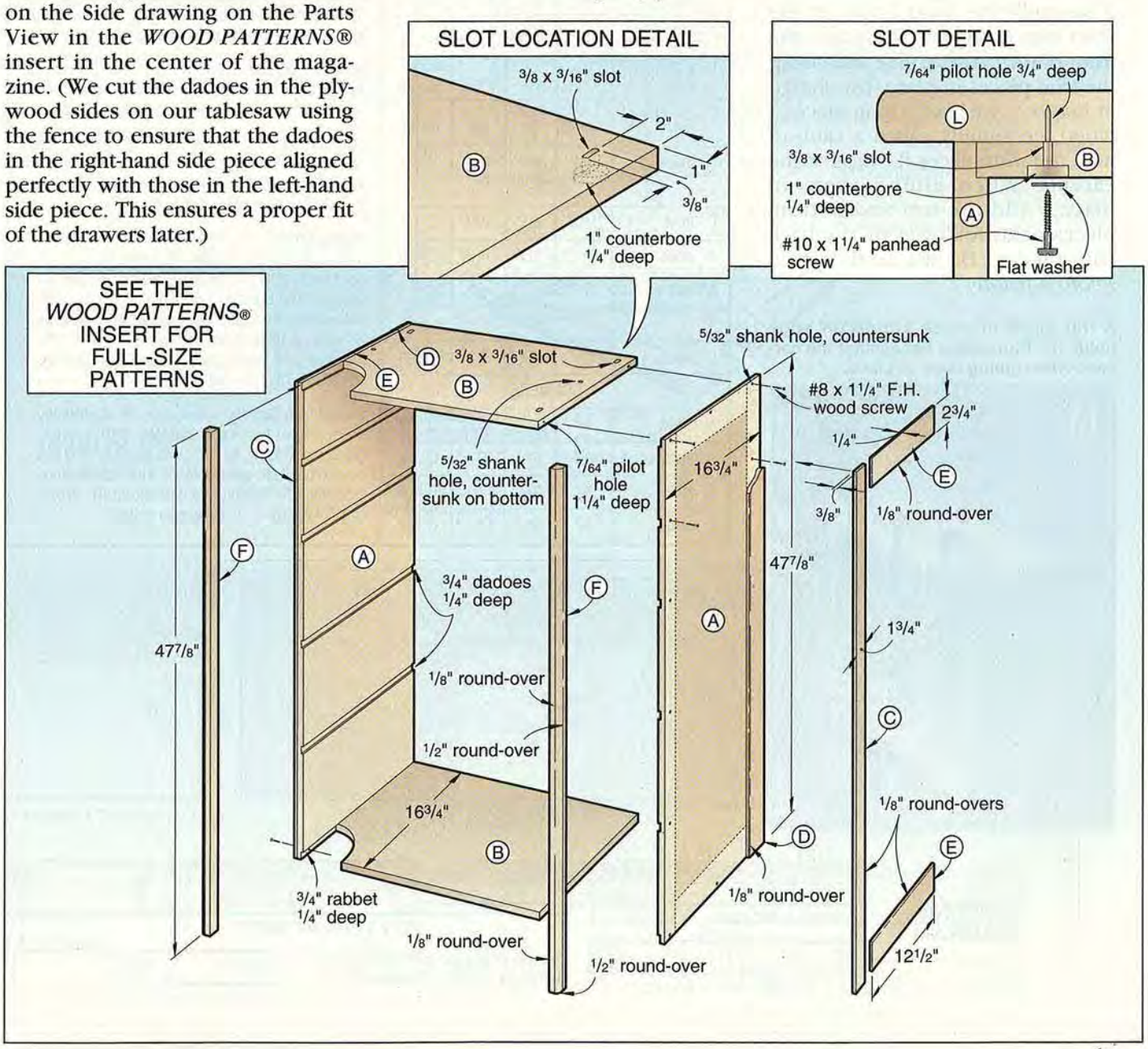

5 Glue the carcase together, checking for square and that the edges are all flush. Drive the screws to further reinforce the assembly. Make sure the sides remain flat (front to back) and that they don't bow out in the middle. Wipe off any excess glue with a damp cloth.

Add the trim, and cover the screw holes

1 Cut the front and back trim pieces (C, D) to size from ⅜" stock. Cut the top and bottom trim pieces (E) to size from ¼" stock.

2 Rout ⅛" round-overs along the edges of the trim pieces (C, D, E).

3 Keeping the front edges of the front trim pieces (C) flush with the front of the carcase, glue and clamp the trim pieces in place. (As shown in *Photo A*, we used a long piece of wood, commonly called a caul, to hold the trim pieces flat against the carcase when gluing them in place.) Add the top and bottom pieces next, followed by the back trim pieces (D) last as shown in *Photo A below.*

A flat piece of stock sitting on edge holds the trim pieces flat against the carcase when gluing them in place.

4 To cover the plywood edges on the front of the carcase, cut the front trim pieces (F) to size. Before cutting the pieces, measure the width of the carcase sides (A) plus front trim (ours measured 1⅛"), and cut the trim pieces (F) to match. See the Top Section View on the Parts View drawing for reference. With the edges flush, glue and clamp the pieces in place.

Continued

Bill of Materials

Part	Finished Size T	W	L	Matl.	Qty.
CARCASE					
A sides	¾"	16¾"	47⅞"	OP	2
B shelves	¾"	16¾"	28½"	OP	6
C front trim	⅜"	1¾"	47⅞"	O	2
D back trim	⅜"	2¾"	47⅞"	O	2
E top & btm. trim	¼"	2¾"	12½"	O	4
F vert. front trim	1"	1⅛"	47⅞"	O	2
G horz. front trim	⅞"	¾"	28"	O	6
H back	¼"	29½"	47⅞"	P	1
BASE					
I front	1 1/16"	3½"	30¾"	O	1
J sides	1 1/16"	3½"	14⅞"	O	2
K* feet	3½" dia.		5"	LO	4
TOP					
L* top	1 1/16"	19"	32¼"	EO	1
DRAWERS					
M fronts	¾"	9¾"	27⅞"	O	3
N fronts	¾"	6¾"	27⅞"	O	2
O sides	½"	9¾"	17 3/16"	C	6
P sides	½"	6¾"	17 3/16"	C	4

Part	Finished Size T	W	L	Matl.	Qty.
DRAWERS					
Q backs	½"	9¾"	27⅜"	C	3
R backs	½"	6¾"	27⅜"	C	2
S bottoms	¼"	16 1/16"	27⅜"	OP	5
T stops	⅜"	¾"	3"	O	10

*Cut parts marked with an * oversize. Trim to finished size according to the how-to instructions.

Materials Key: OP–oak plywood; O–oak; LO–laminated oak; EO–edge-joined oak; C–choice of oak, aspen, soft maple, or poplar; P–plywood.

Supplies: #8×1", #8×1¼", #8×1½" flathead wood screws; #10×1¼" panhead screws with flat washers; 4–5/16" T-nuts; 5/16-18×3" hanger bolts (not necessary if you buy the preturned feet); stain, clear finish.

Buying Guide

Hardware. For the country version we used 10–2" oak knobs, #61710. For the traditional version we used 10–3½" brass bail pulls, #35402. Self-adhesive and self-lubricating nylon tape, 10 mil. thick by ½" wide by 10' long (4 rolls needed), #70615. The Woodworkers' Store, 4365 Willow Drive, Medina, MN 55340. To order, call 800/279-4441.

Turned feet. Country version, four 3½" diameter by 5"-long oak bun feet, catalog #A0557HB5. Traditional version, four 5" diameter by 3"-long oak beaded bun feet, catalog #A0551HB. Adams Wood Products, 974 Forest Drive, Morristown, TN 37814. Or call 423/587-2942 to place an order.

CUTTING DIAGRAM

¾ x 48 x 96" Oak plywood

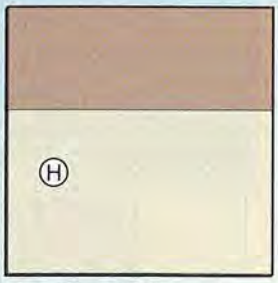

¼ x 48 x 48" Plywood

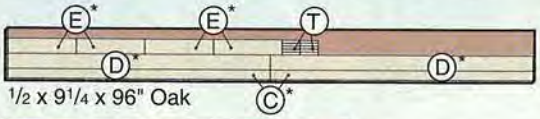

½ x 9¼ x 96" Oak

¾ x 11¼ x 96" Oak

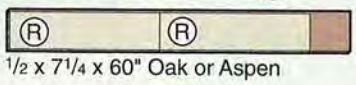

½ x 7¼ x 60" Oak or Aspen

*Plane or resaw to thicknesses listed in the Bill of Materials.

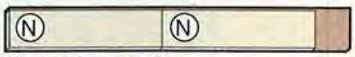

¾ x 7¼ x 60" Oak

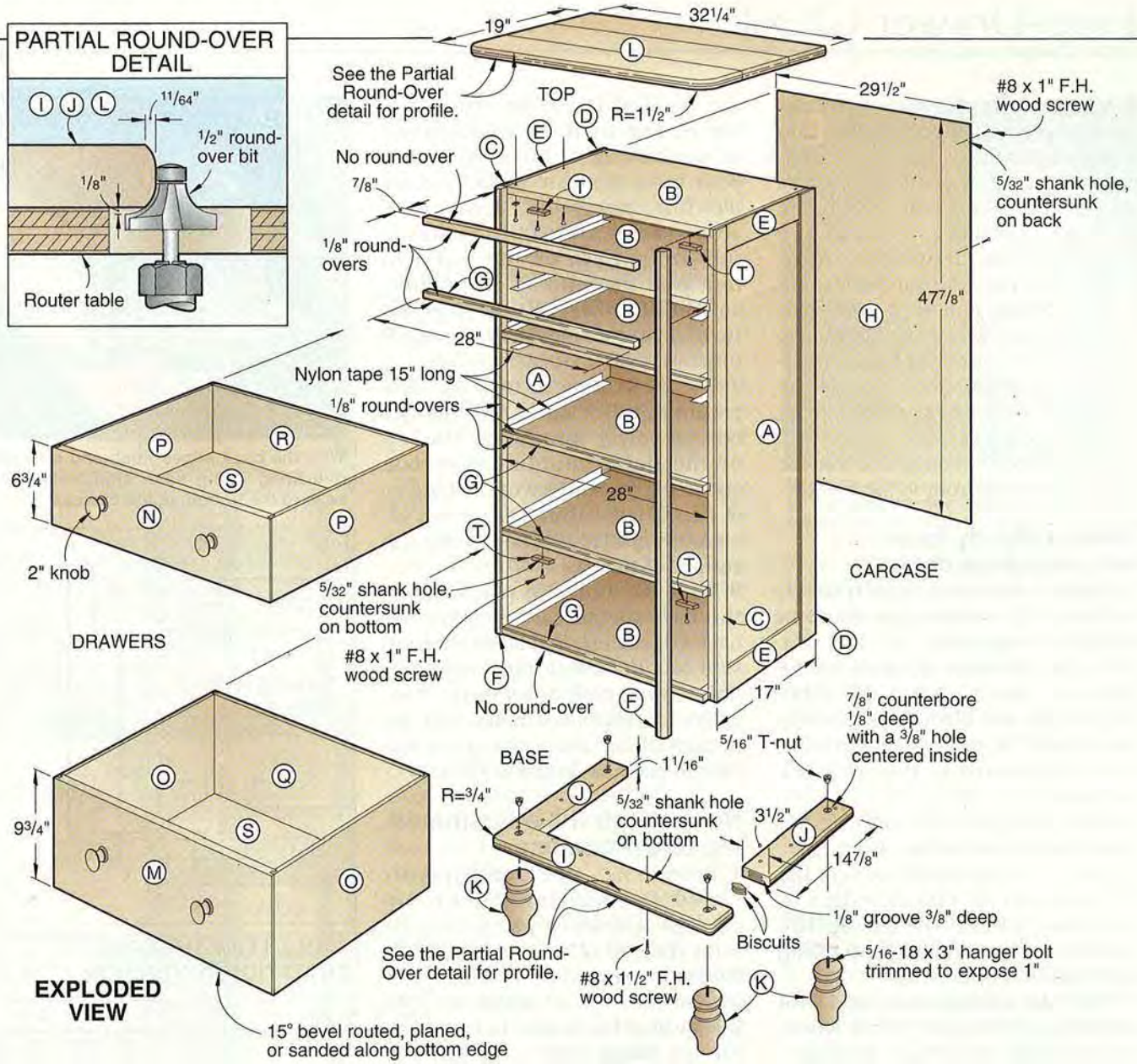

Cutting diagram duplicated from page 68. See issue 111, page 8, for the cutting diagram. Click here to view.

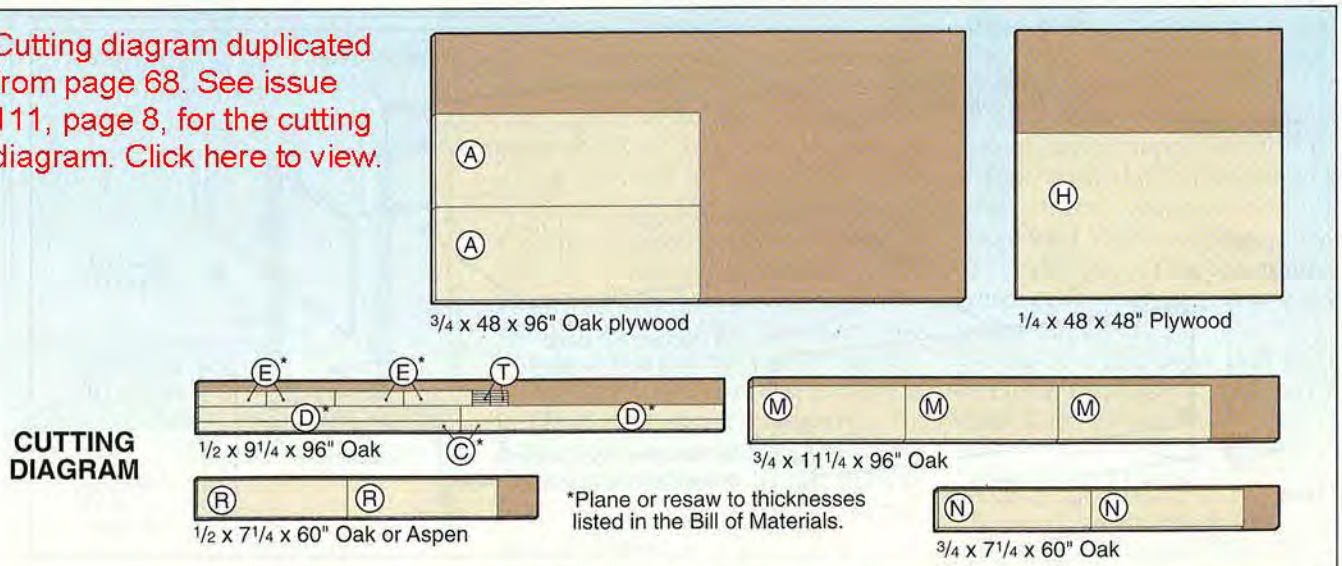
A
A
3/4 x 48 x 96" Oak plywood
H
1/4 x 48 x 48" Plywood
E* E* T
D* D*
C*
1/2 x 9 1/4 x 96" Oak
M M M
3/4 x 11 1/4 x 96" Oak
R R
1/2 x 7 1/4 x 60" Oak or Aspen
*Plane or resaw to thicknesses listed in the Bill of Materials.
N N
3/4 x 7 1/4 x 60" Oak

CUTTING DIAGRAM

5 Measure the distance between the trim pieces (F), and cut the trim pieces (G) to fit.
6 Rout the ⅛" and ½" round-overs on parts F where shown on the Carcase drawing. Using the Exploded View drawing for reference, rout the ⅛" round-overs on parts G where indicated. Note that there's no round-over along the top edge of the top G and no round-over along the bottom edge of the bottom G. Glue and clamp the front trim pieces (G) in place.
7 Measure the opening, and cut the back (H) to size from ¼" plywood.

Make a sturdy base for a stout carcase

1 Cut the solid-stock base front (I) and sides (J) to the sizes listed in the Bill of Materials.
2 To join the base sides (J) to the front (I), use a biscuit or spline joint. Glue and clamp the sides to the front, keeping the outside edges and surfaces flush. Check for square.
3 Mark and cut a ¾" radius on the front corners of the base front (I).
4 Rout a partial round-over on the top and bottom outside edges of the base where shown on the Exploded View and accompanying Partial Round-Over detail.
5 Mark the centerpoints, and drill the holes in the base pieces where shown on the Parts View drawing.
6 For the feet (K), you can either turn your own using the pattern on the pattern insert or order preturned feet from the source listed in the Buying Guide. If you turn your own, laminate stock to form feet that measure 4¼" square (3½" after turning). Then, refer to the full-size pattern on the insert to turn your own. Drill a center hole, and add the hanger bolt (the preturned feet come with a hanger bolt installed).
7 Use a hacksaw to trim the protruding end of each foot hanger bolt so only 1" protrudes. The top of the bolt shouldn't protrude above the top surface of the base.
8 Tap a 5/16" T-nut into each ⅞" counterbore (four total) in the top surface of the base.
9 With the T-nuts in place, clamp the base to the carcase with the back edges flush and centered from side to side. Using the previously drilled mounting holes in the base as guides, drill pilot holes into the bottom of the chest and screw the base in place as shown in *Photo B.*

Now, attach the edge-joined top to the carcase

1 From 1 1/16" stock (commonly called five-quarter stock), rip enough narrower pieces to form the top (L). Your initial lamination should be 1" longer than needed and ½" wider.
2 Edge-glue the boards to form the top blank. Later, trim the top to the finished size listed in the Bill of Materials.

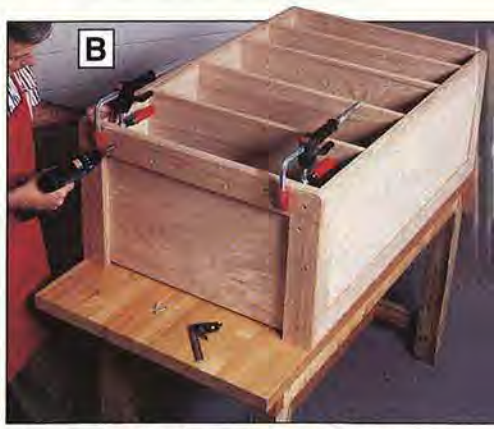

With the back edges flush and an equal overhang along each side, screw the base to the bottom of the carcase.

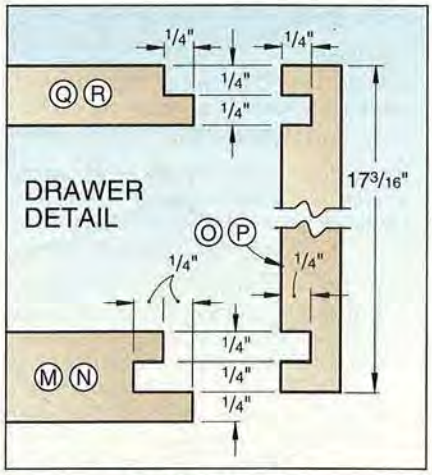

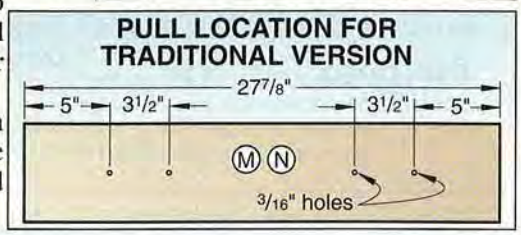

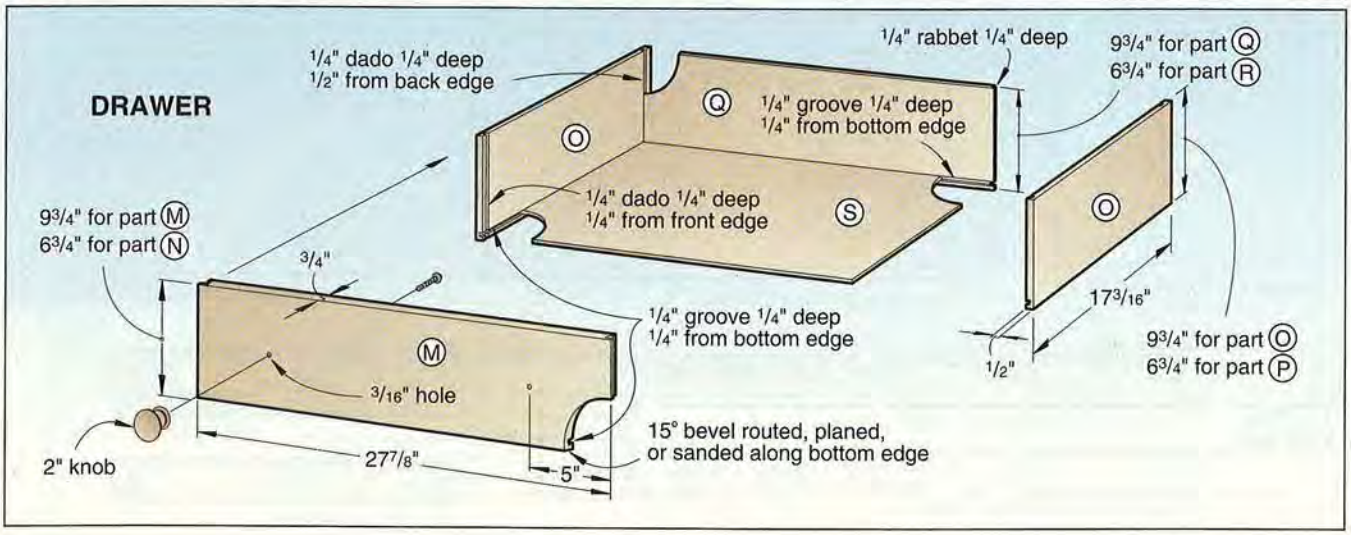

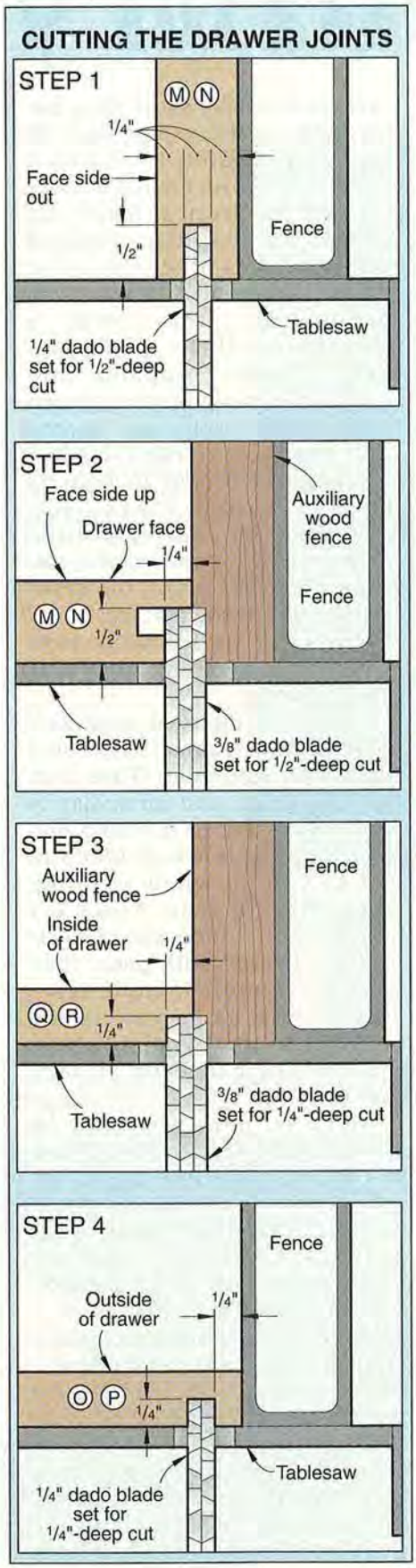

3 Mark and cut a 1½" radius on the front corners of the top. Cut and sand the corners to shape. Rout the partial round-overs along the front and sides of the top. See the Partial Round-Over detail for reference.

Build the five drawers to complete the construction

Note: *Measure the drawer openings before constructing the drawers. The drawers need to be ⅛" less in height and width than the opening. Also, the fronts of the drawers should sit ⅛" back from the fronts of the front trim pieces (G).*

1 Cut the drawer fronts (M, N) to size from ¾"-thick straight-grained oak. Then, from ½" stock, rip and crosscut the sides (O, P), and the backs (Q, R) to the sizes listed in the Bill of Materials.

2 Follow Steps 1 and 2 of the four-step drawing at *left* to machine the ends of the drawer fronts (M, N).

3 Follow Step 3 on the drawing to cut a ¼" rabbet ¼" deep along the ends of the drawer backs (Q, R).

4 Refer to Step 4 on the drawing to machine the mating dadoes on the drawer sides (O, P).

5 Cut the remaining grooves in the drawer fronts and sides where dimensioned on the Drawer drawing to house the plywood bottoms (S). Make sure the groove width is the same as the thickness of the plywood you'll be using for the drawer bottoms.

6 Cut the drawer bottoms (S) to size from ¼" plywood.

7 Dry-clamp (using no glue) each drawer together to check the fit, and check for square. To assemble each drawer, use white glue; it dries slower, giving you more working time. Glue one front piece to one side piece. Add a drawer back, slide the bottom in place, and then glue the other side in place. Clamp the assembly together, taking opposing diagonal measurements from the corners as shown in *Photo C* to check for square.

8 Mark the centerpoints, and drill the mounting holes in the drawer fronts (M, N) to accept your particular hardware.

Measure diagonally from outside corner to outside corner. When the measurements are identical, the drawer is square.

9 To create the look of an equal reveal on the top and bottom of each drawer when slid in place in the cabinet, rout the bottom of each drawer front with a 15° chamfer bit (we used a CMT 857.503.11). You also could sand or plane the 15° chamfer along the bottom edge. The key is to keep the chamfered edge straight.

10 Cut the drawer stops (T) to size, and drill a mounting hole in each. Set them aside for now.

Finishing and final assembly

1 Finish-sand the carcase, drawers, and top. Finish the cabinet as desired. See the country finishing article on *page 72* for the finishing process we used. Or stain the cabinet and drawer fronts, and protect them with a clear finish to achieve the look of the chest on the inset photo on *page 66*.

2 Attach the self-adhesive, self-lubricating nylon tape (see the Buying Guide with the Bill of Materials for our source) where shown on the Exploded View drawing.

3 Slide the drawers into their respective openings, and screw the stops in place.

4 Mark the locations, drill the countersunk pilot holes, and screw the back (H) in place.

Written by Marlen Kemmet
Project Design: Jeff Hayes
Illustrations: Roxanne LeMoine; Lorna Johnson
Photographs: Hetherington Photography

Print this article

Craft a Country

When the time came to apply an authentic-looking old-time country finish to our newly designed oak bedroom furniture set, we turned to our own Robby Pederson to provide the special touch. In addition to Robby's expertise in answering reader correspondence here at *WOOD*® magazine, he works as the hands-on demonstrator in the cabinet shop at Living History Farms in Des Moines, Iowa. That explains his 1800s attire shown in the photos. A student of things past, Robby proved to be the right person to show us how to create a time-worn country look using a modern-day approach.

Start the process by sanding and staining the furniture pieces as you would any fine-furniture project. We sanded through 220-grit and then applied Zar 137 White Oak stain. For better contrast between the stained areas and those you'll paint later, we applied the stain lightly.

Color the pieces by brushing on Zar Antiquing Wedgewood Blue latex paint. Almost immediately, use a clean cloth to wipe off enough of the paint so the stained grain shows through. Paint just one section at a time. If you wait too long to start wiping, the paint will dry and cannot be removed. Because you'll be finishing a large piece of furniture in small segments, watch closely that you remove the same amount of paint from each area.

For a natural "worn" look on our country pieces, Robby rubbed the edges unevenly from spot to spot with 150-grit sandpaper and ScotchBrite medium pads.

Antiques usually show their fair share of wear. But before you rub through any paint, think about where the object would have received the greatest wear, and distress only those areas. Sand off paint at spots likely to have become worn, and then blend the surrounding areas with a ScotchBrite pad. To do this, we used 150-grit sandpaper and ScotchBrite medium pads (green in color). For a natural "worn" look, remember to rub the edges unevenly from spot to spot as shown in *Photo A*. For example, on the dresser, we scuffed the corners of the cabinet, the rail edges, and spots where the drawers rub against the carcase. Don't overdo it. If a surface would have received little wear over the years, leave it alone.

To simulate the aged, used look referred to as "patina," wipe on a coat of Zar Antiquing Glaze over the blue paint, and immediately wipe away most of it with a lint-free cloth, as shown in *Photo B*. Just as you do when staining, wipe with the grain. You'll get better results once the cloth is partially loaded with glaze than when it's completely clean. Leave deposits of glaze in crevices and other areas that wouldn't have received wear or been cleaned over the years.

Add a bit more character by spattering the surface. To achieve this accent (sometimes called "fly-specking"), pour a small amount of the Zar Black Antiquing Glaze in a shallow container. Then, dab an old toothbrush, or a paintbrush with its bristles trimmed to ½" long, into the black glaze. Practice your spattering technique on a piece of paper before trying it on your project. Hold the brush about 6" from the paper, and run your finger through the bristles to determine the amount of spattering produced. Once you have the right touch, add a uniform spatter-

Finish We'll show you how!

To simulate the aged, used look referred to as "patina", wipe on a coat of Zar Antiquing Glaze Coat over the blue paint, and immediately wipe away most of it with a lint-free cloth.

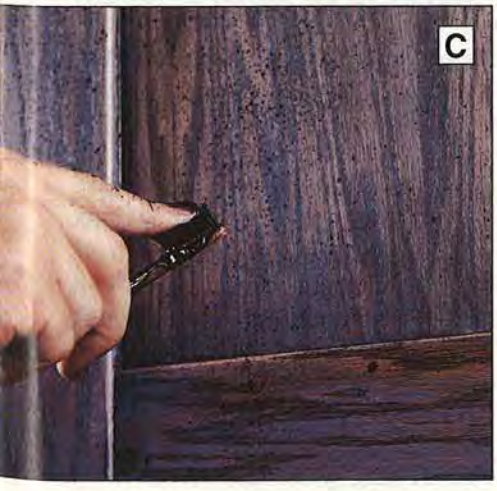

To add a uniform spattering of fine speckles, hold the brush about 6" from the project, and run you finger through the bristles.

ing of fine speckles to the piece as shown in *Photo C*. Again, don't overdo it. A little spattering goes a long way.

Finally, apply a clear, protective coat to all the pieces (painted and unpainted). Using a quality finish brush, we applied Zar satin polyurethane, rubbing between coats with ScotchBrite super-fine pads (grey in color). We repeated the process until we had three coats of the clear finish applied.

Buying Guide

Zar products. 137 White Oak Stain, Black Glaze Coat Antiquing, 216 Wedgewood Blue Antiquing Base Coat, and Satin Polyurethane. For the entire bedroom set, we used one quart of stain, three pints of Wedgewood Blue latex paint, and three half-pints of the Black Glaze. For more information on UGL ZAR products, call 1-800-272-3235 or 1-800-845-5227.

Written by Marlen Kemmet with Jim Downing and Robby Pederson Photographs: Hetherington Photography

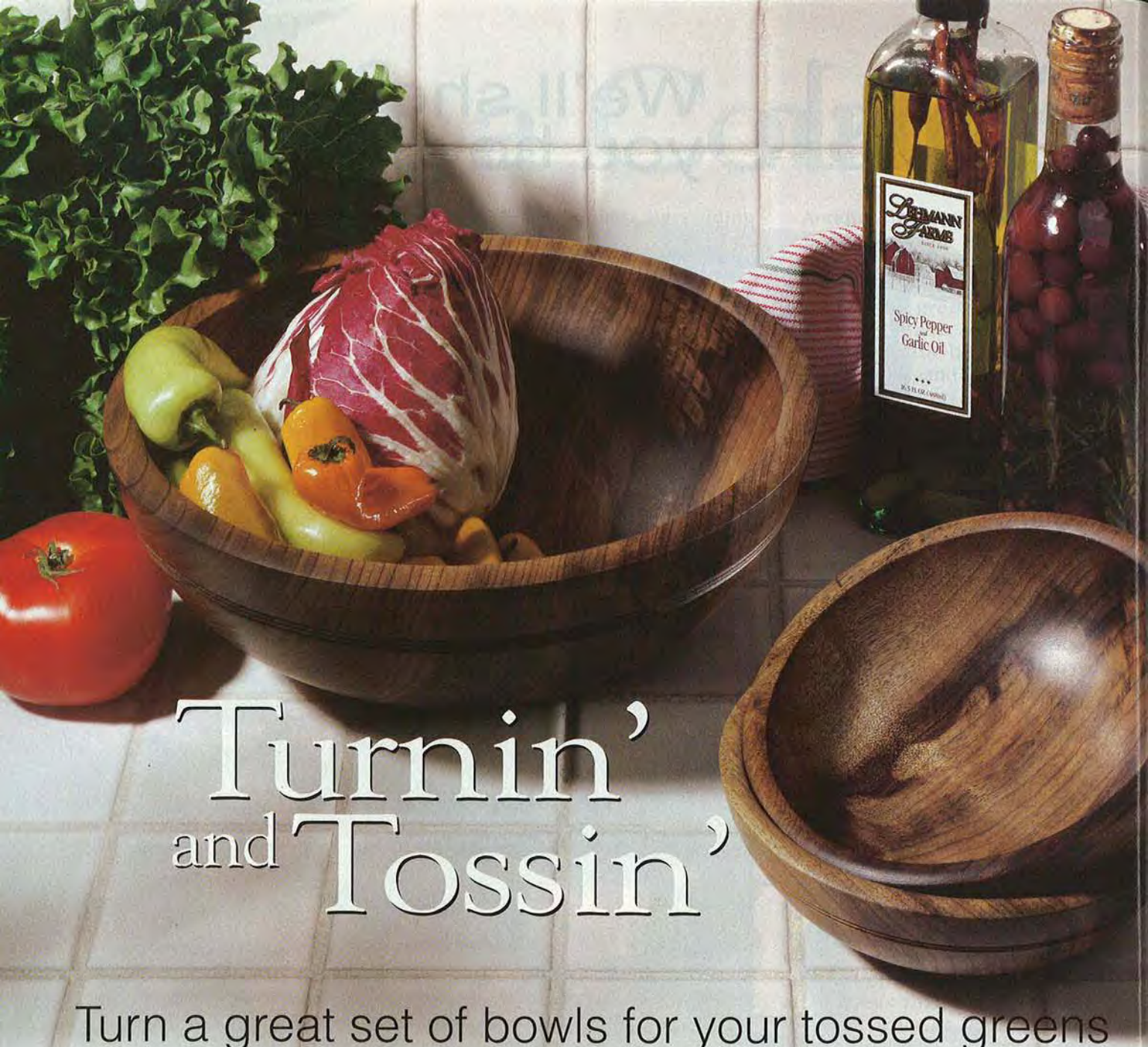

Turnin' and Tossin'

Turn a great set of bowls for your tossed greens

Simple things well designed and executed bring a special joy to life. This salad-bowl set from Provo, Utah, woodturner Rex Burningham is a perfect example. Here's how to turn Rex's bowls, along with some of his tips for turning success.

Print this article

Project setup

Stock: 4×11×12" (approximately) bowl blank for the large bowl, 2½×7×7" blank for each individual serving bowl.

Lathe equipment: Four-jaw chuck, screw center.

Turning tools: ½" deep-fluted bowl gouge, ½" skew, 1⅜" heavy, round-nose scraper.

Lathe speeds: For the 12" bowl—roughing, 400 rpm; finish-turning and sanding, 700 rpm.

Start with a beautiful blank

A bowl 11–12" in diameter turned from a blank 4–5" thick will hold plenty of salad and fit well on most tables. To make a complete set, turn matching individual serving bowls. You can turn those individual salad bowls, which can be 6–7" in diameter, from blanks 2–2½" thick.

And which wood should you turn your bowls from? "Choose one that will be relatively stable in the drying process," Rex says.

BOWL BLANKS
(End grain shown)

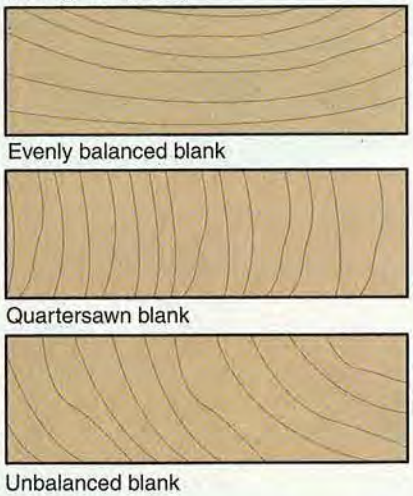

Evenly balanced blank

Quartersawn blank

Unbalanced blank

"Many American hardwoods such as ash, cherry, walnut, and hard or soft maple fill the bill and make excellent salad bowls," he adds. For the bowls shown at *left,* Rex selected his favorite salad-bowl wood, Oregon myrtle.

Avoid bowl stock with knots, checks, bark inclusions, and other defects. "If you're turning green wood (20 percent or higher moisture content), select an evenly balanced blank or a quartersawn one," Rex advises. Bowls from such blanks will maintain symmetry as the wood dries. Identify balanced or quartersawn blanks by the end grain; the illustrations *above* show what to look for.

How a dovetail at the rim makes a salad bowl better

Thin-wall turnings may be fine for exhibition pieces, but Rex takes a different approach with functional bowls. "I give my bowls a thicker rim with a dovetail shape," he says (see the illustration *above right*). "Dovetails are well known in woodworking—they look good and provide a lot of holding power." They offer similar advantages in bowls:

- Thickening the rim gives the bowl a more substantial look.
- You can get a better grip on the bowl when you pick it up.

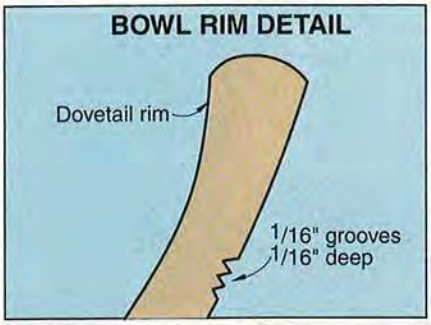

- The salad stays in the bowl better with the wall angled inward.
- Cracks are less likely. "Bottom-heavy, rim-thin salad bowls usually crack at the rim after time due to uneven wood movement from moisture loss," Rex explains. The dovetail adds wood to the rim, bringing it more into balance with the bowl bottom.

The turning begins on the outside of the bowl

Draw diagonal lines on the top of the blank to locate the center. Set your compass to half the diameter of the bowl, and draw a circle around the centerpoint. Drill a pilot hole for your screw center, then bandsaw the blank.

Mount the blank and center on the lathe. Bring up the tailstock to help stabilize the blank while you turn it true and shape the outside of the bowl. "Always give the blank a few turns by hand after you mount it to make sure it clears the tool rest," Rex suggests.

Start with the lathe at a slow speed—about 400 rpm is good for the 12" bowl. "As a general rule, the larger the chucked wood, the slower the lathe speed," Rex says. With a ½" bowl gouge, cut away the bottom corner and out-of-round parts on the side of the blank to bring it into balance. Once the piece is in balance, increase the lathe speed for a better cut. Slide back the tailstock to true the face.

A screw center holds the bandsawn blank for turning. We'll bandsaw a blank for a small bowl from the smaller block.

Lay your skew chisel flat on the tool rest to form a dovetail mortise for the bowl chuck. For turning on a wasteblock, form a flat gluing face here.

Power-sanding with a resilient foam pad smooths the bowl's curve.

Turn the bowl's exterior to rough shape, about ¼" larger overall than the finished form. Form a flat about one-third of the bowl's diameter on the bottom. Then, referring to the full-size half-pattern for the large bowl on the *opposite page*, shape the bowl.

Make a shearing cut with the bowl gouge to develop a smooth curve along the bowl's side from the foot to the rim. Stop the lathe to check for hidden stock defects you may have uncovered.

Turn a recess in the foot to receive the expanding jaws of your lathe chuck. To do it easily, measure the diameter of the jaws, and draw a circle that size around the center on the bowl bottom.

Then, inside the circle, cut a flat-bottom recess about ⅛" deep (or as required by your particular chuck). Form a dovetail on the inside edge to give the chuck jaws a solid grip. Rex lays his skew flat on the tool rest to cut the dovetail recess, as shown *above*.

With the bowl gouge, make the finishing cut on the outside of the bowl to establish final shape and size. The full-size pattern shows the shape of the bowl Rex turned.

Note: *If you don't have a woodturning chuck, turn a flat surface on the bottom of the foot. Sand and finish the bowl's exterior (except for the bottom of the foot) as described* below. *Then, glue a wasteblock the same diameter as your 3-4" faceplate to the foot. Using the tail center as a centering aid, screw the faceplate to the wasteblock.*

Finish the outside before you turn to the inside

Sand the bowl with progressively finer grits from 100 to 320. Rex prefers power-sanding with a 3" foam sanding disc like the one shown *above right*. Hook-and-loop material on the sander and the abrasive disc makes changing grits easy, and the resilient pad conforms to the bowl's curves. Chuck the sander in a reversible portable drill, preferably a variable-speed model that runs in the range of 1800-2500 rpm.

Sand with the lathe running and the drill rotating forward (clockwise). When sanding near the foot, reverse the drill rotation to prevent rounding over the corner. Sand by hand inside the foot so you won't round over the dovetail for the chuck.

Make the three decorative V-cuts where shown. For accurate spacing, first draw light pencil lines on the bowl by holding a pencil against the side with the lathe running. Then, make the cuts with the point of your skew.

Apply a clear finish to the outside, including the foot, before rechucking the bowl to turn the inside. For a rich-looking, salad-safe finish, Rex gives his bowls a coating of mineral oil (available at drugstores). "First, I put on a heavy coat with a rag. Then, I wipe away the excess with a

clean rag and let it dry. For a little more gloss," Rex adds, "I apply beeswax while the lathe is running. With it still running, I burnish the bowl with a rag—this melts the wax and spreads it evenly over the bowl."

Here's inside information on completing your bowl

Remove the screw center, and chuck the bowl by the foot recess. To ensure secure chucking, clean all chips, sawdust, and excess finish from the foot recess before attaching the bowl to the chuck. Afterward, check for tightness by grasping the bowl at the rim and attempting to wobble it.

True the top surface. Mark ⅝" in from the edge with a pencil, then cut in with the bowl gouge just inside the line to define the rim.

Shape the curved rim face. Turn it to finished shape now rather than going back later. "You should complete this area while all the waste wood is still inside to help support the rim," Rex says.

Clear out the center of the bowl, and shape the inside wall. "Do this in a series of gouge cuts, starting from the center and working outward," Rex says. Work toward a uniform wall thickness from just under the rim to the foot area, with a smooth curve across the bottom. After achieving rough shape, make a finishing gouge cut to form a smooth curve from just under the rim to the center of the bowl.

Clean up any ridges and grain tear-out with a heavy, roundnose scraper. Make a light cut from the center toward the rim.

"The scraper cuts most cleanly on the flat grain in the center of the bowl," Rex says. "On the sidewall, you'll be cutting both end grain and flat grain. This almost always leads to a catch with the scraper. You'll do better to clean up tear-out on the sidewall with the bowl gouge," he says.

Sand the inside as you did the outside. Work carefully at the rim to maintain crisp separation between the rim face and the inside and outside bowl walls. Finish the inside of the bowl and the rim as you did the outside. Follow the same procedure to turn the individual salad bowls.

Project Design: Rex Burningham
Illustrations: Roxanne LeMoine; Lorna Johnson
Photographs: Marty Baldwin; Hetherington Photography

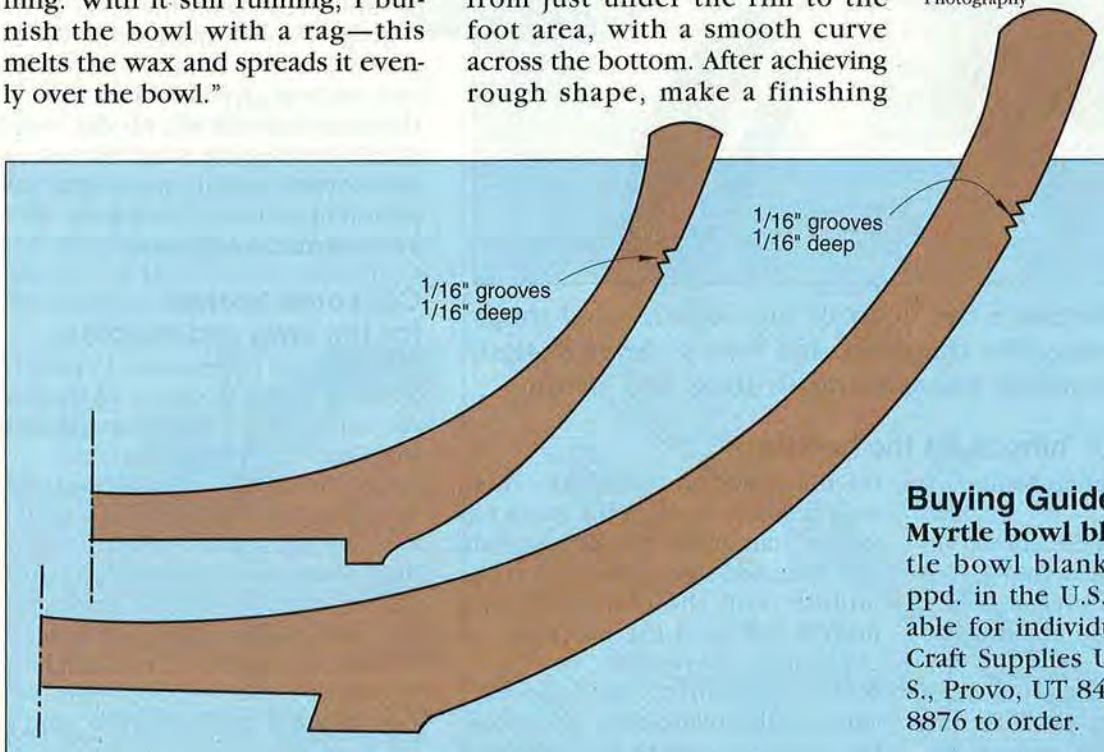

Buying Guide

Myrtle bowl blank. Oregon myrtle bowl blank, 4×11×11", $29 ppd. in the U.S. Other sizes available for individual serving bowls. Craft Supplies USA, 1287 E. 1120 S., Provo, UT 84606. Call 800/551-8876 to order.

Salad Tongs With A Twist

The hinged handle that's the heart of our stylish salad tongs looks tricky to make. But thanks to Jan Svec's clever design, you can do it with simple bandsawing, drilling, and sanding.

The whole project hinges on the handle

1 Cut a ¾×3¾×14" handle blank (A). (We used maple.)

2 Drill a 3/16" hole where shown on the Handle Blank drawing. Use a drill press to ensure a straight hole.

3 Draw a pencil line around the blank at the middle.

4 Bandsaw lengthwise from each end of the blank to the middle, orienting the kerfs as shown on the Handle Blank drawing. For sawing, position the bandsaw fence to center the blade on the blank. Then, with the hole through the blank facing up, start at the end farthest from the hole, and saw to the line at the middle. Roll the blank 90°, and make a cut from the other end of the blank to the middle.

5 Now, by boring into opposite sides of the blank with a Forstner bit, you can separate the piece into two parts, which will become the hinged handle. Here's how to do it.

Chuck a 1¼" Forstner bit into your drill press. Lay the sawn blank on the drill-press table, the hole facing up. Adjust the fence on the drill-press table to position the kerf in the blank so it is tangent to the rim of the bit that's nearest the fence, as shown at 1, *opposite page bottom*.

Slide the blank along the fence to center it end-to-end under the bit. Position a stopblock at the right end, and clamp it to the fence.

Center the end of a piece of ¾"-thick scrapwood at least 2" wide on the handle blank to press the blank against the fence. Clamp the piece (2 in the photo) to the table.

Now, bore halfway through the handle blank. Stop boring as soon as the bit breaks into the horizontal bandsaw kerf (3 in the photo).

6 Rotate the workpiece 180°, and bore from the opposite side to the bandsaw kerf. The handle blank should separate into two pieces.

7 Sand the bandsaw marks from the inside faces of each part. (Hand-sanding with a sanding block worked best for us.)

8 With a 1½" drum sander in the drill press, sand the ends of the hinge cuts to matching curves. You won't have to sand much at the two ends where the drum runs in the same axis that the bit did. You'll do more reshaping at the two places where your sanding drum runs perpendicular to the bit's axis. Sand away all machining marks.

Cut some circles for the jaws and handles

1 Resaw and plane stock 4" wide by 13" long to the thickness of the handle sides, which should be slightly less than ⅜". (We used walnut.)

2 Cut three 3½"-diameter circles from the thin stock. You can do this with an adjustable circle cutter and drill press since the pilot-bit hole will lie within a ¾"-wide strip across the middle that will become waste.

3 Mark a ¾"-wide strip across the middle of each circle. Bandsaw slightly inside the strip, then sand to the lines with a disc sander to form the segments for the grips (B), top jaw (C), and bottom jaw (D).

4 Glue and clamp the segments to the handle sides (A) where shown. Note that the handle grips (B) go on the end that's nearest the 3/16" hole. (We used moisture-resistant Tite-Bond II glue.)

5 Transfer the full-size patterns to the handle grips, top jaw, and bottom jaw. (You'll find the patterns in the *WOOD PATTERNS®* insert in the middle of the magazine.)

6 Drill the 1", 3/8", and 1/4" holes where shown. Before drilling the 1/4" holes, check the actual diameter of the dowel stock you'll be using for parts E. Size the holes to fit the dowel stock.

7 Rout a 1/8" round-over along the outside edges of each tong half and on both sides of the finger holes in the handle grips (B). Sand to break the sharp inside edges. Chamfer both sides of the 3/8" holes with a countersink bit.

Finish the parts, and assemble the salad tongs

1 Finish-sand the tong halves with progressively finer abrasives from 150 to 320 grit.

2 Cut seven 5/8" lengths of 1/4" dowel rod. Chamfer one end, and glue the unchamfered ends into the 1/4" holes.

3 Apply two coats of penetrating oil finish, and let the oil dry thoroughly.

4 Assemble the tong halves with a binding post and two brass washers. (We bought the binding post at an office-supply store.) Apply a drop of LocTite to the threads to keep the binding post tight.

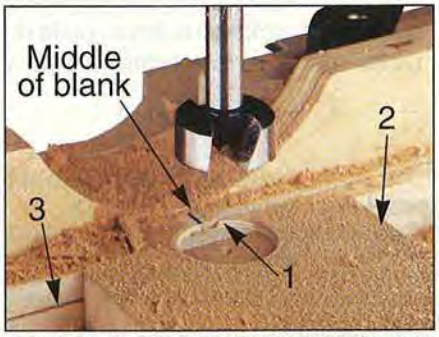

Bore into the bandsawn blank at the center to make the handle sides. The numbers refer to Step 5 on the *opposite page*.

Project Design: Jan Svec
Photographs: Marty Baldwin
Illustrations: Kim Downing; Lorna Johnson

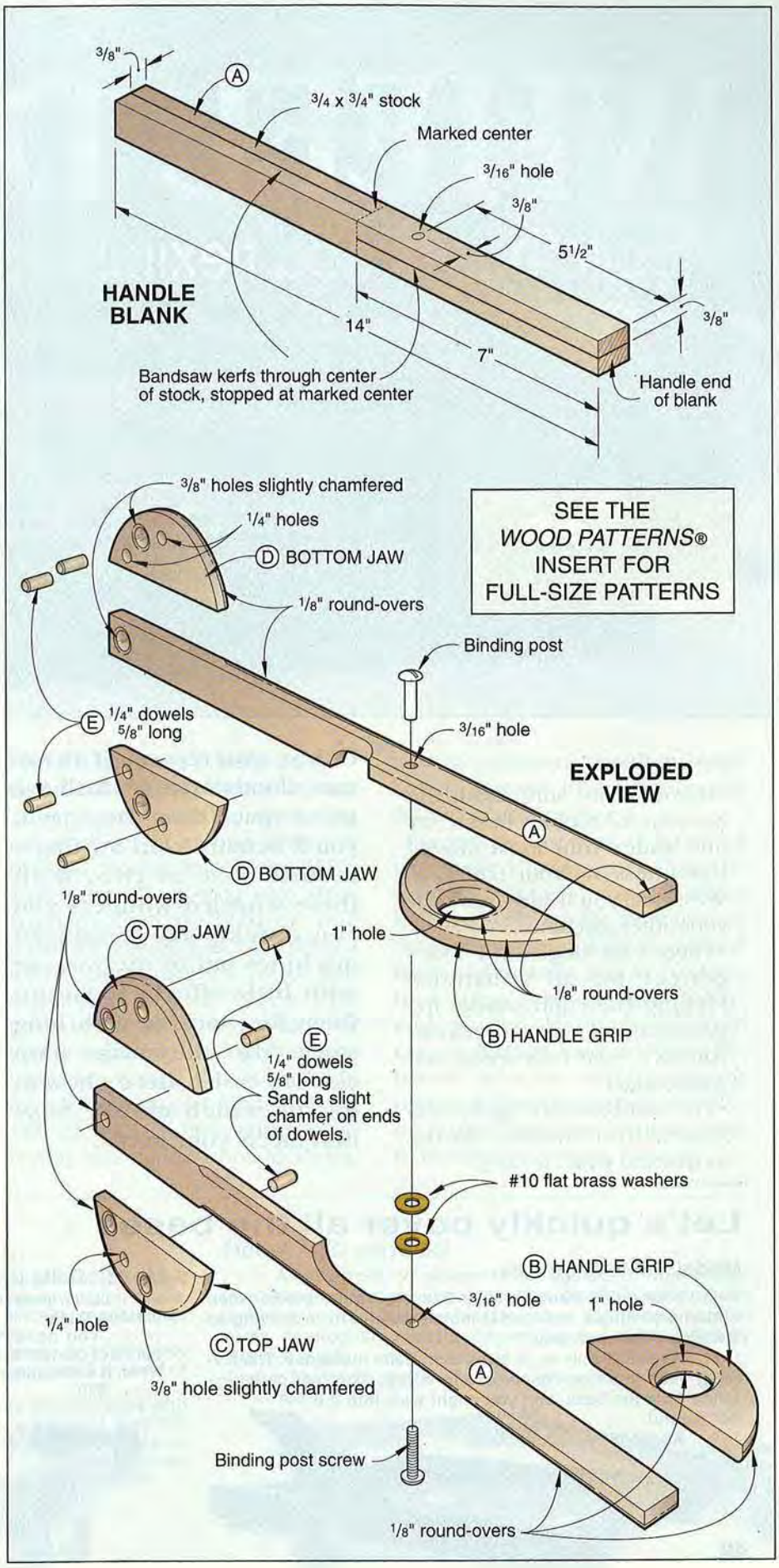

WHEEL DEALS

Mobile bases add flexibility and convenience

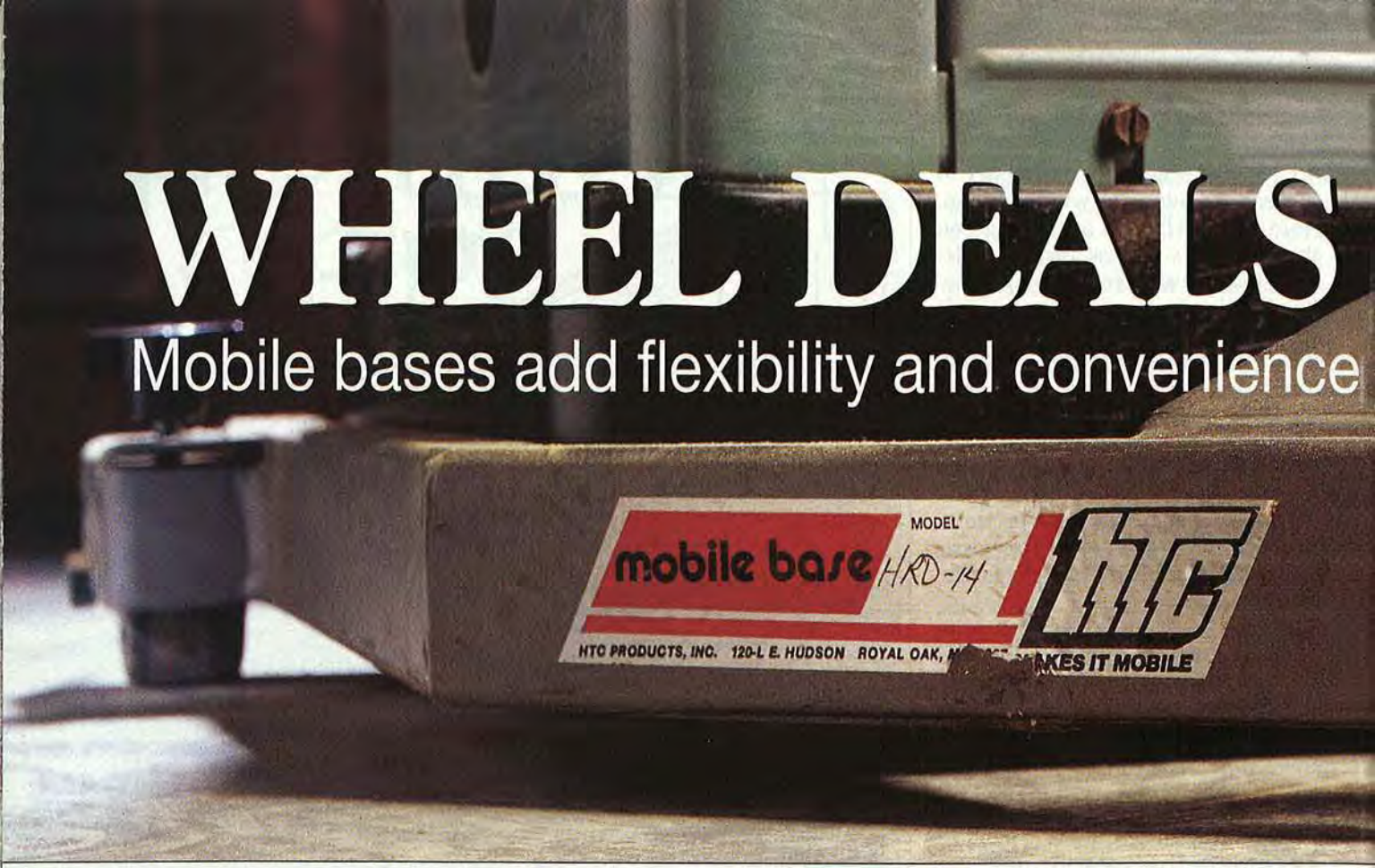

FAST FACTS

- If you're not sure about the benefits of mobile bases, try one under your most moved tool—possibly your tablesaw. We think you'll buy more for your other machines.
- There's no single base that's perfect for all situations. Picking the right model depends on the type of machines you own, your floor space, and your budget.
- The best bases are rigidly constructed for stability during moves and while resting.

Unless you're one of those rare woodworkers who have more space than they need, you'll benefit from owning a mobile base or two. With these wheeled wonders you can quickly move unused machines out of the way, or with little effort reposition them for working with long stock. Also, they make shop cleanup easier. Here's how to decide which mobile base best meets your needs.

A quick overview of the mobile base market

HTC created the mobile base market in 1980. For more than a decade, your only choice in a manufactured mobile base was an HTC all-steel version in a fixed size that rolls and rests on three wheels. But, as the woodworking world came to realize the benefits of mobile bases, competitors looked for ways to carve their own niche in this market.

Delta came out with a fixed-size base that rests on four points. Delta also unveiled an economy

Let's quickly cover all the bases

Print this article

Model: Delta fixed-size

Pros: Four-point stance makes this base quite stable when stationary. Single foot pedal makes switch from moving to stationary fast and easy.

Cons: Available only in 18 sizes to fit Delta machines. The leveling pads are time-consuming to adjust. The foot pedal extends from the base, and you might walk into it if not careful.

Price: About $95 for most sizes.

Model: Delta universal

Pros: Lower cost than fixed-size bases. Adapts to machines of various sizes.

Cons: You need to supply 1½"-square hardwood rails that connect corner brackets. Base twists and becomes unstable when it encounters a floor obstruction.

Price: $70

base that changes in size when you add your own wooden rails in various lengths.

Vega, too, has universal bases that fit various machines—one model line has all-steel components, and a less-expensive version has wooden rails. With the Vegas, you *pull* the machine with the help of a wheeled, levered handle. (With the other bases, you *push* the machine.)

In answer to this competition, HTC recently unveiled its own all-steel universal base. It rests *and* rolls on four points.

Here's how we'll help you decide between these bases

To lend you a hand in navigating the small sea of mobile bases, we ordered models from Delta, HTC, and Vega. We tested two sizes from each manufacturer: one about 21" square that we loaded a 400-pound tablesaw onto, and one about 17½×27" for a 150-pound bandsaw. And, for those of you considering making your own base, we tested the homemade mobile base project found in issue 100 of *WOOD*® magazine. (The testing was done by Bob McFarlin, an independent consultant who has no interest in promoting the *WOOD* magazine base.)

For testing purposes, Bob moved the loaded bases over smooth, uneven, level, and slightly inclined surfaces. He maneuvered them through tight areas, parked them along walls and in corners, took them through tight turns, and passed them over floor cracks, bumps, and sawdust. He tested them for stability during moves and while resting. Finally, he loaded each base with weights to determine carrying capacity.

Continued

Model: HTC fixed-size

Pros: Solidly made with the highest-quality wheels of the tested bases. Three-point stance requires no leveling on uneven floors. Stock versions available to fit nearly every machine made today. Other sizes available on a custom-made basis.

Cons: More prone to tipping than four-point bases, but this rarely presents a problem. To lock base in position you need to bend or squat down and turn two thumbscrews.

Price: About $95 for most sizes. Larger bases for tablesaws with extension tables or heavy-duty versions for equipment over 475 pounds may cost two to three times more.

Model: HTC universal

Pros: Adapts from 12" square to 36" square, or from 30×42" to 20×52" in rectangular configuration. All-metal construction makes it sturdier than universal bases with wood components. Four-point contact during moves and while stationary makes it stable.

Cons: Leveling pads are time consuming to adjust.

Price: $80

WHEEL DEALS

Considerations that make a difference between bases

• ***Universal versus fixed-size.*** Four of the bases Bob tested fall into the universal category. That means you can change their size to fit the footprint of various leg stands or machine cabinets. You do this either by making different wooden rails (the parts that stretch the span between the wheel brackets) or by reassembling metal rails and brackets.

Universal bases give you two key advantages. If you upgrade a machine, you can keep the base and reconfigure it to fit the new machine's base. And universal bases offer a low-cost entry into mobile bases (see discussion of individual bases for pricing).

On the other hand, fixed-size bases prove more stable than some universal bases with wooden rails. That's because fixed-size bases do not twist. This twisting happens when a wheel encounters debris or a floor crack. Then, when turning a tall machine, you could tip the machine if you don't have a firm grip on it.

This twisting was more pronounced in the 17½×27" bases than in the 21" square bases. So we don't recommend universal bases with wood rails for machines with footprints greater than 21" in either direction.

Tip: *To improve the rigidity of a universal base with wood rails, bolt the machine to the base.*

• ***Number of points in contact with the floor.*** All of the bases have three wheels in contact with the floor while moving except for the HTC universal base and the *WOOD*® magazine base—both of which have four wheels. The three-wheel bases have two non-swiveling wheels in back and one swiveling caster in front. These bases turn on a dime.

The four-wheel bases have two swiveling casters in front and require slightly more pushing force, especially in tight turns. However, the four-wheelers give you added stability during moves—something that comes in handy with top-heavy tools such as drill presses.

Note: *We classify the Vega bases as having three points in contact with the floor during moves, and four points while stationary, although they differ somewhat from other bases with three and four points in these respective categories. See discussion of the Vega bases for more explanation.*

When you bring a machine to a rest and position it for use, all of the bases (except for the HTC fixed-size model) have four points in contact with the floor. With these you operate a foot pedal (see photo *left*) to switch the weight of the machine from the front caster to two leveling pads and vice versa. These pads adjust up or down to bring the base in firm contact with the floor on all four points. This setup proves stable, but adjusting the pads can be a small hassle if you frequently reposition the tool on an uneven floor (see photo *above*).

By pressing down or lifting up on a foot pedal you can quickly convert some bases from mobile to stationary.

Leveling pads on the Delta and HTC (universal only) bases require that you bend down and use a wrench for adjustments.

With an HTC fixed-size base, you don't level it because its three points make contact with any surface. And there's no foot pedal to push. But you do have to bend over to turn the thumbscrews that lock the rear wheels.

Although the three-point stance of the HTC base does not provide as much stability as four points in the stationary position, we've had no stability problems with HTC fixed-size bases placed under a

Model: *WOOD* magazine mobile tool base made from plan and kit.

Pros: Four-point contact during moves and while stationary makes it stable. Offers a pleasing wood look.
Cons: Soft rubber wheels won't support machines weighing in at more than 200 pounds. Requires several hours to make.
Price: $40 for the hardware kit (does not include angle iron or wood, which may add $10 to $40 to cost of stand, depending on your source).

Model: Vega utility series

Pros: The lowest-cost way to buy a mobile base. You can adapt the base to machines of various sizes by adding ¾×1½" wood rails. Like other Vega model, no locking

variety of machines in the *WOOD*® magazine shop for more than 10 years. But the potential for the base to rock does exist if you put a top-heavy, unbalanced machine on a three-point base. In that case, simply kick a pair of wood wedges on either side of the caster before using the machine.

•***Weight capacity.*** We loaded each base with up to 500 pounds to see how they held up. All of them handled this weight with two exceptions. The metal corners on the Delta universal stand flexed at 350 pounds, and the soft rubber wheels on the *WOOD* magazine base became difficult to roll with 200 pounds aboard.

Although the Vega Utility model passed our 500-pound test, the manufacturer conservatively rates its capacity at 300 pounds. HTC rates the capacity of its universal base at 400 pounds.

If you have a machine that weighs in excess of 500 pounds, look to Vega or HTC. Vega rates its MMK/MMB series of bases at 800 pounds, and HTC will build you a custom base to handle nearly any load.

WHAT TO KNOW BEFORE YOU GO MOBILE

MANUFACTURER/ IMPORTER	TYPE (1)	MODEL	POINTS IN CONTACT WITH FLOOR: MOVING	POINTS IN CONTACT WITH FLOOR: STATIONARY	FRAME MATERIALS (2)	MACHINE HEIGHT ADDED BY BASE (INCHES)	LOCKING MECHANISM (3)	PERFORMANCE EVALUATION (4): STABILITY: MOVING STRAIGHT	STABILITY: TURNING	STABILITY: RESTING (LOCKED AND LEVELED) (6)	STABILITY: HITTING AN OBSTRUCTION (5)	EASE OF MOVING OVER 1/2" HIGH BUMP (7)	MANEUVERABILITY	EASE OF LEVELING	ASSEMBLY TIME	PRICE
DELTA	F	VARIES	3	4	S	3/4	A	E	E	E	G	P	E	F	10 minutes	SEE DISCUSSION OF THE INDIVIDUAL MACHINES
	U	50-345	3	4	S/W	3/4	A	E	G	E	F	P	E	P	1 hour	
HTC	F	VARIES	3	3	S	1	B	E	E	G	G	P	E	E	1 minute	
	U	2000	4	4	S	1/2	A	E	E	E	G	P	E	F	20 minutes	
VEGA	U	MMK/MMB SERIES	3	4	S	1/16	C	E	E	E	E	G	F	G	10 minutes	
	U	UTILITY	3	4	S/W	1/16	C	E	G	E	E	G	F	G	20 minutes	
WOOD MAGAZINE	F	MOBILE TOOL BASE	4	4	S/W	1	A	E	E	E	E	P	E	F	6 hours	

NOTES:

1. (F) Fixed-size
   (U) Universal-size
2. (S) Steel
   (S/W) Steel and wood
3. (A) Foot-operated pedal with flip-up caster
   (B) Hand-operated thumbscrews lock two wheels (bending over or squatting required)
   (C) Lift handle lowers base onto floor
4. E Excellent
   G Good
   F Fair
   P Poor
5. Obstruction was a small screw
   E No base twisting, no tool tipping
   G Some base twisting
   F Machine can tip over -- maintain firm grip on machine for stability
6. E Base sits rock solid on four points
   G Machine can tip slightly
7. G With tool mover handle you can pull tool over bump
   P You must bend over and lift front wheel over bump

Where to call for more information:

Delta 800/433-2486	Vega 800/222-8342
HTC 800/624-2027	WOOD magazine 800/374-9663

We'll put these bases under our machines any day

If you want to mobilize a machine that you plan to keep for a while, buy an HTC fixed-size base. They were the smoothest and sturdiest fixed-size bases in our test.

For tools that you plan to upgrade, a universal base may save you money in the long run because it will adapt to your new machine. Among the universals, we liked the HTC best.

The Vega models were the only bases capable of surmounting a wide floor crack or hump without the operator having to bend over to pick up the base. And the universal models give budget-conscious shoppers a chance at becoming mobile. But, because of the space required for using the handle, we recommend the Vegas only for shops with plenty of floor space.

Written by Bill Krier
Product testing: Bob McFarlin
Photographs: Doug Hetherington

Model: Vega MMK/MMB series
Pros: Basic version adapts to machines 13–28" wide and 17–29" long, and you can buy two other versions that extend to 29–50" long and 50–71" long. No locking required because this base rests on steel plates front and back. You can avoid lifting the machine onto the base by assembling the base under the machine.
Cons: Requires a levered handle with wheels that must be stored when not used (only one handle required for multiple machines). Using the handle requires maneuvering space.
Price: $110 to $140 depending on length, without handle. Handle costs $10.

Model: Vega Utility
Pros: Base assembles in minutes and requires no tools. Handle required, and you can assemble the base under the machine.
Cons: The base twists, but this did not create instability in moves because the handle keeps the front of the base off the floor. Handle creates the same limitations described for the other Vega model.
Price: About $45

Auburn "Boattail" Speedster

We don't often say this, but this beautiful automobile, with its boat-shaped trunk and carefully contoured parts, is more of a challenge to build than you might imagine. But oh, the results are incredible. If you decide to build one of these take-apart gems, and if you send us a photo of your finished model, we'll send you a free engraved, sequentially numbered license plate. Number one is taken, but we've got several hundred to go.

Continued

Print this article

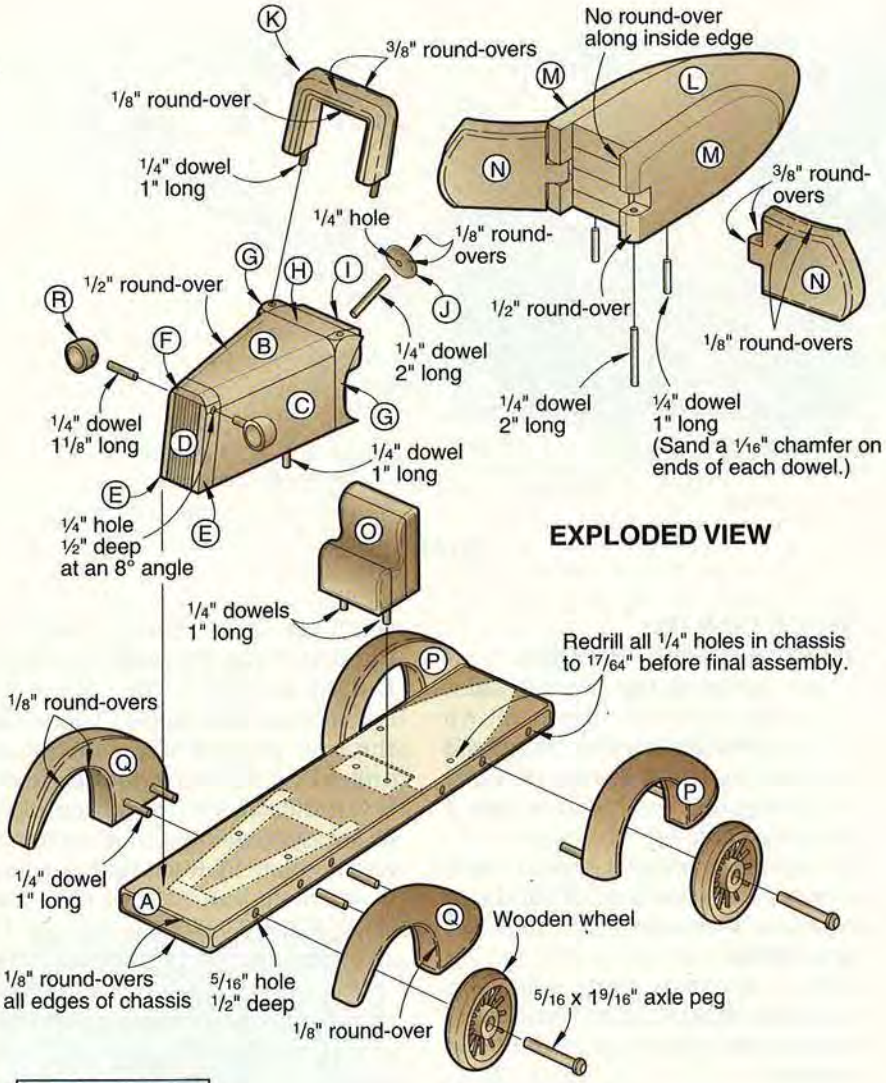

SEE THE *WOOD PATTERNS®* INSERT FOR FULL-SIZE PATTERNS

CUTTING DIAGRAM

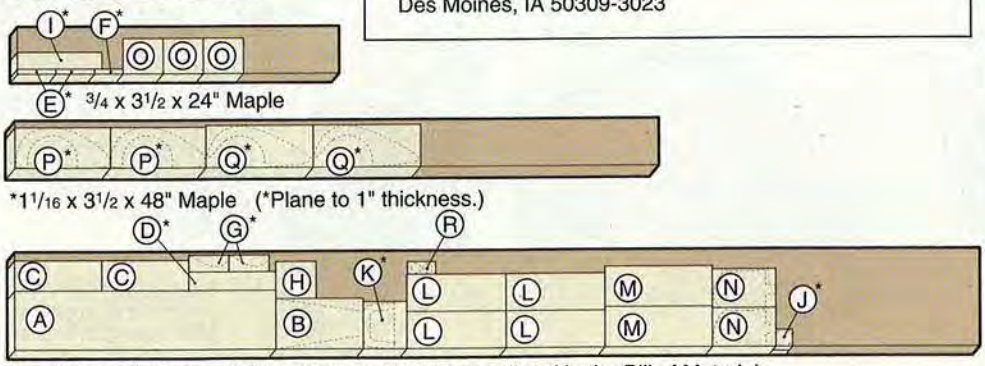

3/4 x 7 1/4 x 72" Cherry *Plane or resaw to thickness listed in the Bill of Materials.

FREE LICENSE PLATE

To order, just send us a photograph of your completed Auburn and a self-addressed, stamped envelope to

I Built an Auburn
WOOD® Magazine
1716 Locust, GA310
Des Moines, IA 50309-3023

Bill of Materials

Part	Finished Size T	W	L	Matl.	Qty.
CHASSIS AND HOOD					
A chassis	3/4"	4 3/8"	19 1/2"	C	1
B hood top	3/4"	3 3/4"	6 1/2"	C	1
C hood sides	3/4"	2 1/4"	6 1/2"	C	2
D* grille	5/8"	1 3/8"	2 7/8"	C	1
E grille sides	5/8"	3/8"	2 7/8"	M	2
F grille top	5/8"	3/8"	2 1/8"	M	1
G* sides	5/8"	1 1/4"	3"	C	2
H firewall	3/4"	2 3/4"	3"	C	1
I* dash	5/8"	1 1/4"	2 3/4"	M	1
J* steering wheel	3/8"	1 1/4"-diam.		C	1
K* windshield	3/4"	3 1/2"	3 1/4"	C	1
TRUNK, DOORS, AND SEAT					
L trunk	3"	2 3/4"	7 3/8"	LC	1
M sides	3/4"	3"	8"	C	2
N doors	3/4"	2 15/16"	4 3/4"	C	2
O eat	2 1/4"	2 5/8"	3"	LM	1
FENDERS AND HEADLIGHTS					
P* rear	1"	3"	7 1/8"	M	2
Q* front	1"	3 1/8"	8"	M	2
R headlight blank	3/4"	1 1/2"	3"	C	1

*Initially cut parts marked with an * oversized. Then, trim to finished size according to the how-to instructions.

Materials Key: C–cherry, M–maple, LC– laminated cherry, LM–laminated maple.

Supplies: 1/4" dowel stock, clear finish.

Buying Guide

Spoked wheels. Four 13/16x3 1/2"-diameter, #508 spoked wheels with axles. Key #WD1298, $9.95 ppd. Cherry Tree Toys, Inc., P.O. Box 369, Belmont, OH 43718 or call 800/848-4363 to order.

Hardwood Kit. All the individual pieces shown on the Cutting Diagram cut oversized from the thickness and species listed in the Bill of Materials. Kit no. W110, $39.95 ppd. Wheels not included. Heritage Building Specialties, 205 North Cascade, Fergus Falls, MN 56537. Or call 800/524-4184 to order.

Toy catalog. For a plan and kit catalog of other toys from the designer of this project, send $3 to Baldwin Toy Company, P.O. Box 390484, Omaha, NE 68139.

Speedster

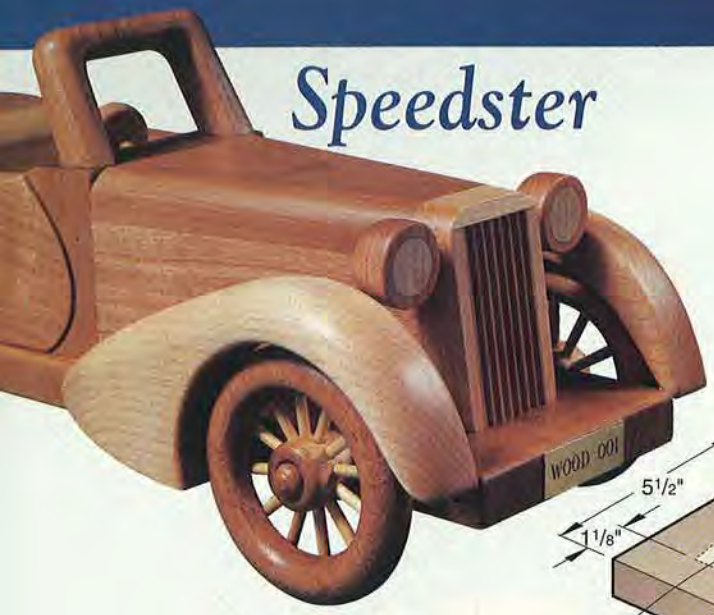

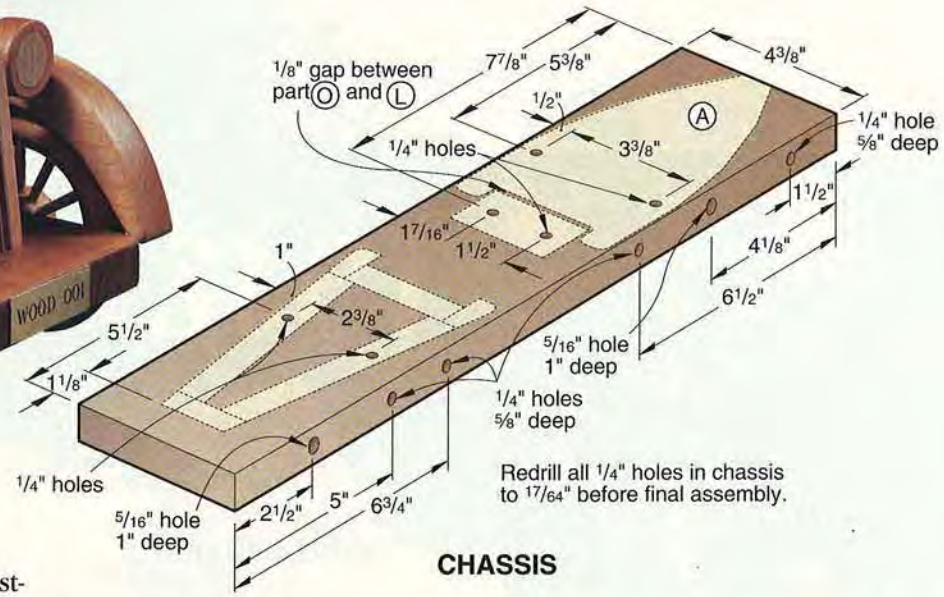

CHASSIS

OK, model builders, let's start with the chassis

1 Cut the chassis (A) to the size listed in the Bill of Materials. Mark the six centerpoints for the ¼" holes on the *top surface* of the chassis where dimensioned on the Chassis drawing. Using a brad-point bit in your drill press, drill the ¼" holes through the chassis where marked.

2 Mark the four 5/16" axle-hole centerpoints on the *edges* of the chassis where shown on the Chassis drawing. Drill them 1" deep. (We used a large handscrew clamp to hold the chassis steady and square to the drill-press table when drilling the holes.) Then, mark the centerpoints for the ¼" holes for mounting the fenders, and drill them 5/8" deep where marked.

3 Rout ⅛" round-overs along all edges of the chassis.

Here's how the hood parts go together

1 Cut the hood top (B) and sides (C) to the sizes and shapes shown on *step 1* of the Forming the Hood drawing. Glue and clamp the three pieces together as shown in *step 1* of the drawing.

2 Angle your miter gauge 8°, and crosscut the back end of the hood assembly where shown in *step 2* of the drawing.

3 With the miter gauge still at 8°, angle the blade 8° from vertical and crosscut the front end of the hood assembly.

4 Cut the grille (D) to size plus 4" in length. Groove the front surface of the grille as shown in the Groove Cutting detail accompanying *Step 3*. Crosscut the grille to length.

5 Cut parts E and F to size, and glue the parts onto the grille (D) where shown in *step 3*. Glue the grille assembly to the hood. Then, trim the top, bottom, and sides of the grille (D, E, F) flush with the hood.

6 Cut the sides (G) and firewall (H) to size and shape. Cut the dash (I) to size plus 4". Rout the ½" round-overs along one edge of the piece,

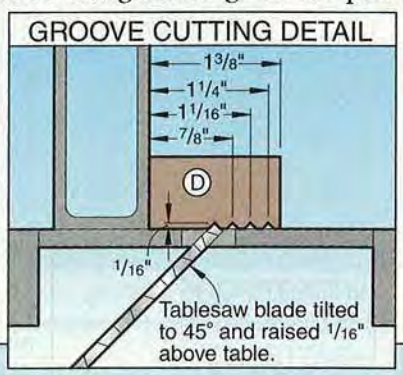

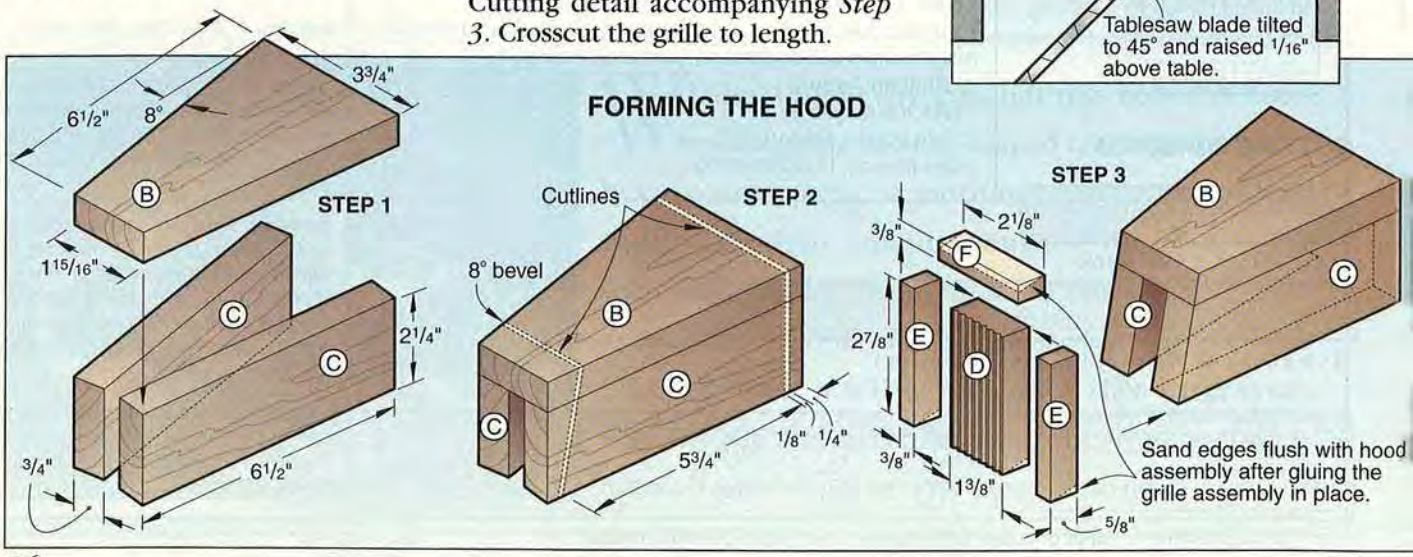

and then crosscut the dash to final length. Glue and clamp the pieces (G, H, I) together as shown in Step 4. Drill the angled ¼" steering-column hole through I and H at 10°.

7 Rout ½" round-overs along the top edges of the hood/grille assembly where shown in *step 5* of the drawing.

8 Glue the assembly (G, H, I) to the hood as shown in *step 5*. Later, sand the edges of the firewall sides (G) flush with the sides of the hood. Sand the top edge of the dashboard (I) flush with the top of the hood.

9 To form the steering wheel (J), use a compass to mark a 1¼"-diameter disc on a piece of ⅜"-thick cherry stock. Drill a ¼" hole through the center of the marked disc, and then cut and sand it to shape.

10 Glue a 3"-long piece of ¼" dowel stock into the hole in the steering wheel. Chuck the steering-wheel dowel into a drill press, turn the drill press on, and sand ⅛" round-overs along the edges of the steering wheel. Trim the steering-wheel dowel to 2" long.

11 Using cloth-backed double-faced tape, locate and adhere the hood assembly to the chassis where dimensioned on the Chassis drawing. Turn the chassis and hood assembly upside down and position the it on your drill-press table. Using the previously drilled ¼" holes in the chassis as guides, drill ¼" holes ½" deep into the hood as shown in *photo A*.

Use the previously drilled holes in the chassis as guides to drill holes into the hood assembly.

Use the bottom of the windshield blank as an alignment guide to drill a pair of mating holes into the hood assembly.

12 Separate the pieces and remove the tape. Redrill the holes in the chassis to 17/64". Cut two ¼" dowels to 1" long, and glue them in place in the bottom of the hood.

Shaping the windshield won't take you long

1 Cut a piece of ¾"-thick cherry to 3½" wide by 3¼" long. Transfer the Front View pattern of the windshield (K) from the pattern insert to the windshield blank where shown on the *WOOD PATTERNS®* insert in the center of the magazine.

2 Mark the ¼" hole locations on the bottom end of the windshield blank. Use your drill press to drill ¼" holes 1¾" deep into the blank where shown on the drawing.

3 Tilt your tablesaw blade 25° from vertical (or make this cut on your mitersaw), and bevel-cut the blank in two where shown on the drawing. Save the bottom piece.

4 Bandsaw the outside edge of the windshield to shape. Sand to the line. Then, rout ⅜" round-overs along the outside edges (not the bottom) of the windshield.

5 Bandsaw and sand the inside of the windshield to shape. Rout ⅛" round-overs along inside edges of the windshield. Now, hand-sand the windshield smooth.

6 Clamp the hood assembly to a flat surface as shown in *photo B*. Use double-faced tape and a hand-screw clamp to secure the hole guide in place where shown in the photo. Now, use the guide for alignment to drill a pair of ¼" holes in the hood as shown in the photo. Do not glue the windshield (K) in place yet.

Continued

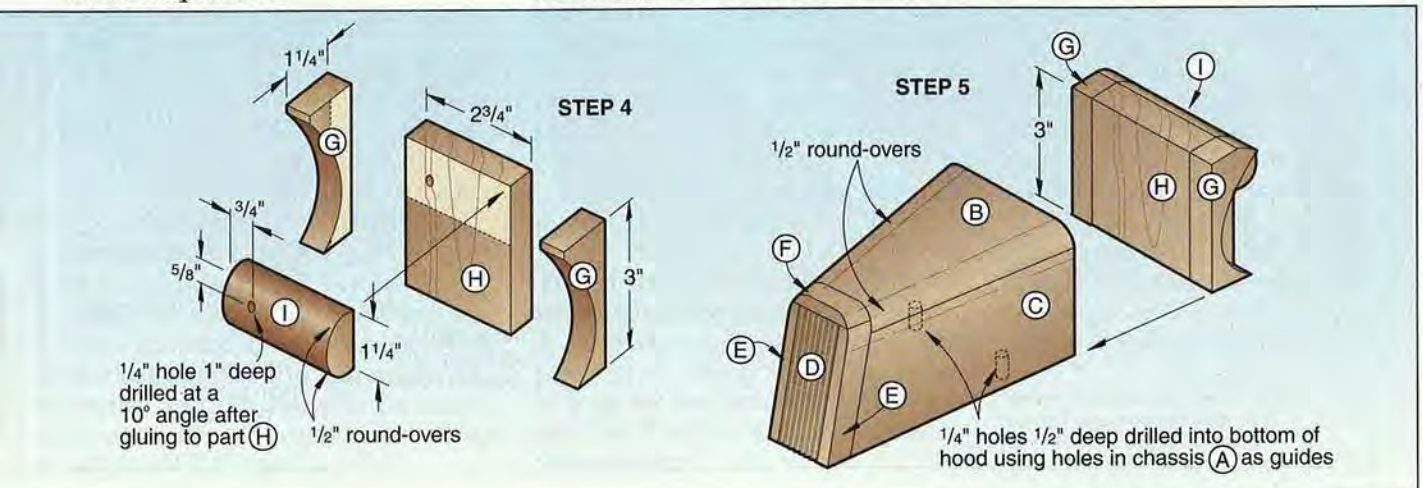

Speedster

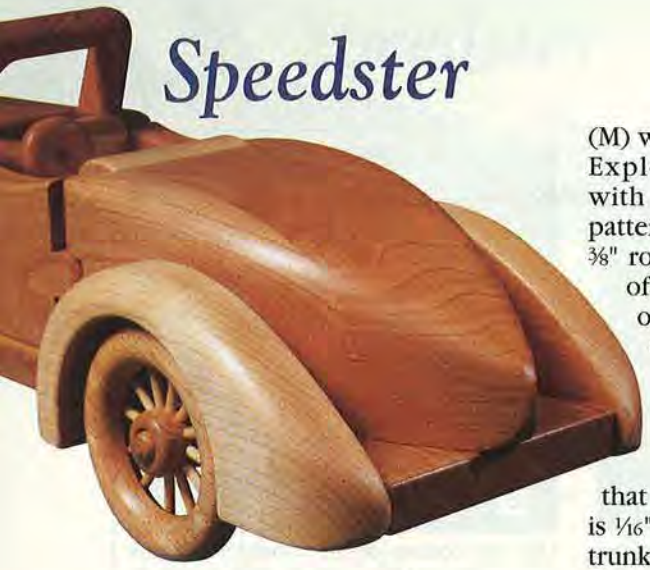

OK, it's time to add the trunk and swinging doors

1 Using the Trunk drawing for reference, cut the trunk body pieces (L), and glue them together in the configuration shown on the drawing. (We cut the pieces a bit oversized, allowing us to trim the laminated block to the exact size shown on the Trunk drawing.)

2 Cut the trunk sides (M) and doors (N) to the sizes listed in the Bill of Materials.

3 Rout ½" round-overs along the front outside end of each trunk side (M) where shown on the Trunk and Exploded View drawings along with the full-size patterns on the pattern insert. Switch bits, and rout ⅜" round-overs along the back end of each door (N) where shown on the same drawings.

4 Transfer the full-size patterns to the doors and trunk sides. Cut mating notches in the doors and trunk sides. Note on the pattern insert that the bottom edge of the doors is 1/16" above the bottom edge of the trunk assembly.

5 Using your drill press and fence, carefully align the pieces, and drill a ¼" hole through the bottom of the trunk side (M) and through the door (N) where shown on the full-size pattern. (For clearance when opening and closing the door, we left a 1/16" gap between the pieces.) Repeat for the other trunk side and door. Now, for the door to swing on the dowel later, redrill the hole in each door to 17/64".

6 Cut and sand the doors to shape. Cut and sand the front edge of each door carefully; you'll want an even gap between the doors and the sides G later.

7 Keeping the back ends flush, glue and clamp the trunk sides (M) to the trunk lamination (L). The front ends of the trunk sides should protrude ⅝" beyond the front end of the trunk lamination where shown on the Trunk drawing.

8 Attach the Top View pattern of the trunk to the trunk lamination (L, M). The Side View pattern should still be attached. Bandsaw along the lines of the Top View pattern first. Then, using double-faced tape, stick the two cut-away side pieces back in place.

9 As shown in *photo C,* cut along the lines on the Side View pattern to cut the top and bottom of the trunk to shape. Use a stationary belt/disc sander to sand away any cutlines on the trunk.

10 Round over the top edges on the trunk. (To do this, we used a flat bastard 10" Nicholson file. *Do not* try to do this with a router. We filed and sanded until we had a ½" round-over to match the round-over on the hood.) As a guide for the round-overs, cut the ½" template on the pattern insert to shape. See the photo *above left* for reference when shaping the trunk.

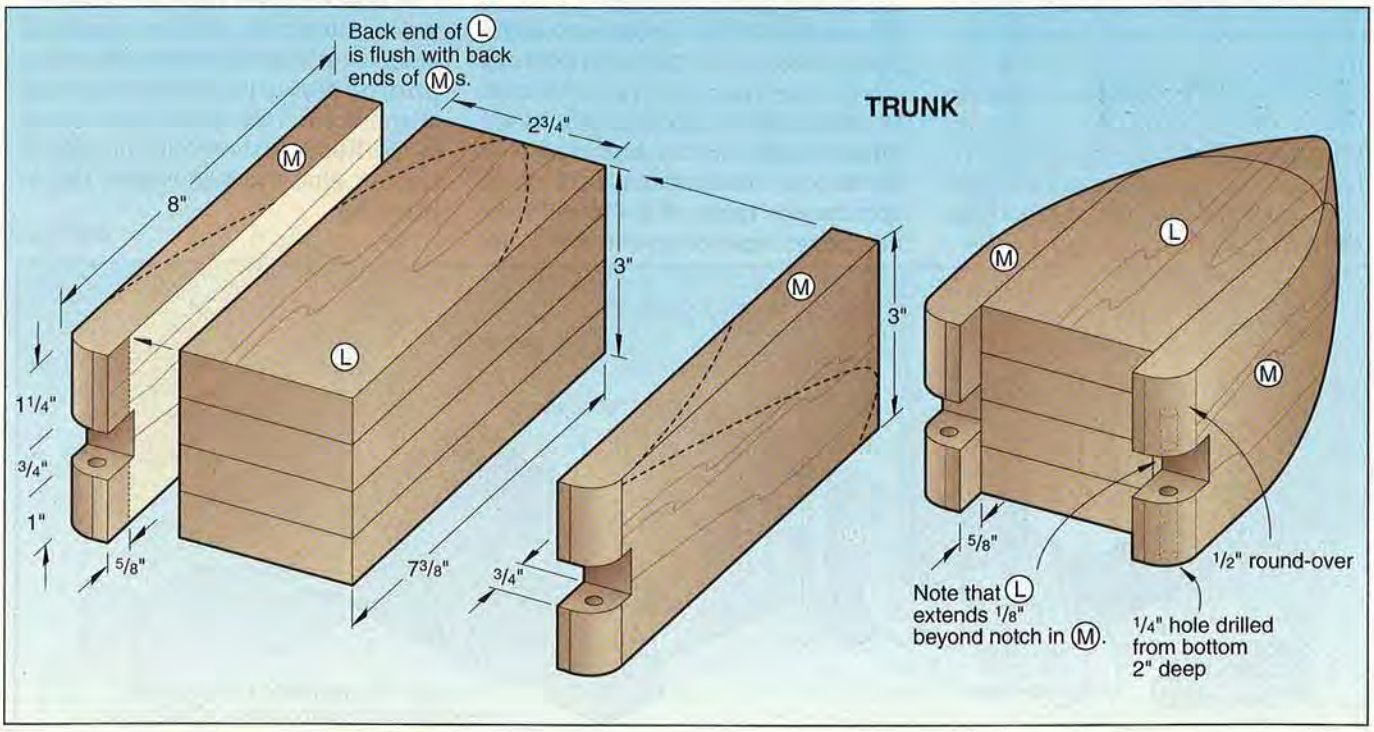

Cut along the top-view lines, tape the two waste pieces back in place, and then cut along the side-view lines to shape the trunk.

Add the doors, and locate the trunk/door assembly

1 Place the hood on the chassis.
2 Attach the doors to the trunk with two ¼" dowels 2" long. Put glue in the upper hole in the trunk sides (M) only. Be careful not to get glue on the door, which must swing freely on the dowel.
3 Place double-faced tape on the bottom side of the trunk. Position the trunk with doors attached on the chassis until you have an even 1/16" gap between the doors (N) and parts G. Then, press the trunk against the chassis. Using the holes in the chassis as guides, drill mating holes into the trunk.
4 Separate the pieces, and glue a pair of ¼" dowels 1" long into the holes in the trunk. Then, redrill the holes in the chassis to 17/64".

Comfortable, contoured seating is a must

1 Laminate three pieces of ¾" maple to form a blank for the seat (O). Transfer the seat pattern from the pattern insert to one end of the blank, and cut the seat to shape. Rout or sand ⅛" round-overs along all edges of the seat.
2 Position the seat on the chassis, and use the existing holes in the chassis as guides to drill a pair of holes into the bottom of the seat. Then, redrill the holes in the chassis to 17/64". Add a pair of dowels to the seat.

The shapely maple fenders set off your stylish car

1 Cut four fender blanks (P, Q) to the sizes listed in the Bill of Materials. (We planed five-quarter stock to 1" thick.)
2 Place the chassis on ⅛" spacers. Fit ¼" dowel centers into two of the front-fender holes. Position the front-fender blank so it protrudes ⅛" beyond the front of the chassis. Squeeze the fender against the chassis to indent the dowel-hole centerpoints on the inside face of the fender. Repeat for the other front fender.
3 Drill ¼" holes ½" deep on the inside of each front-fender blank.
4 Adhere the Top View patterns to the front fenders, and cut along the short, curved cutline (cut 1). Using double-faced tape, stick the waste piece back on, and cut the outside (not wheel opening) to shape on each front fender (cut 2). File and sand a ½" round-over along the top curved edge of each fender. Now, cut the wheel opening to shape (cut 3), and sand a ⅛" round-over along this curve.
5 Cut the front-fender dowels to length, and glue them in place in the fenders.
6 Repeat the process to form the rear fenders. As shown in the photo *in the upper left-hand corner of the opposite page*, the rear fenders should protrude 3/16" beyond the back end of the chassis.
7 Redrill the fender mounting holes in the chassis to 17/64".

You'll need some headlights for nighttime driving

1 To make the headlights, cut a piece of ¾" cherry to 1½" wide by 3" long for the headlight blank (R). See the *WOOD PATTERNS®* insert for reference.
2 Mark the centerpoints on one surface, and bore a pair of ¾" holes ⅛" deep. Then, drill a pair of ¼" holes ⅝" deep centered in each counterbore. Finally, mark the centerpoints on one edge of the headlight blank, and drill a pair of ¼" holes ¾" deep.
3 Bandsaw (we used a ⅛" blade) the headlights to shape from the block. Then, cut two ¼" dowels 4" long each, and use hotmelt adhesive to temporarily adhere them into the ¼" holes inside the ¾" counterbores. Chuck the ¼" dowel into your drill press, turn the drill press on, and sand the back end of the headlight to shape. Repeat with the other headlight. Remove both ¼" dowels.
4 Using a ¾" plug cutter, make two ⅛"-thick maple plugs, and glue them into the counterbores in the front of both headlights. Align the grain of the plug with that of the headlight. Later, sand the front of the headlights flush.
5 Tilt the table on your drill press or make an 8° angle support, and drill the ¼" holes for the headlight dowels into part E of the hood.
6 Cut a pair of ¼" dowels 1⅛" long, and glue one into the side of each headlight.

Get out the driving gloves– you're almost finished

1 Finish-sand all the pieces, and add the finish, being careful not to get finish into the holes. (We used Minwax Antique Oil Finish.)
2 If children under the age of three will be playing with the finished car, we recommend gluing the headlights and steering wheel in place. It eliminates the chance of a child swallowing them. For older children or for a display/puzzle model, leave the parts removable.
3 Using the axles supplied with the wheels (see the Buying Guide for our source), secure (no glue) the wheels to the chassis.

Written by Marlen Kemmet
Project Design: ©Steve Baldwin
Illustrations: Roxanne LeMoine
Photographs: Hetherington Studio

AS-NEAT-AS-IT-GETS

Multipurpose

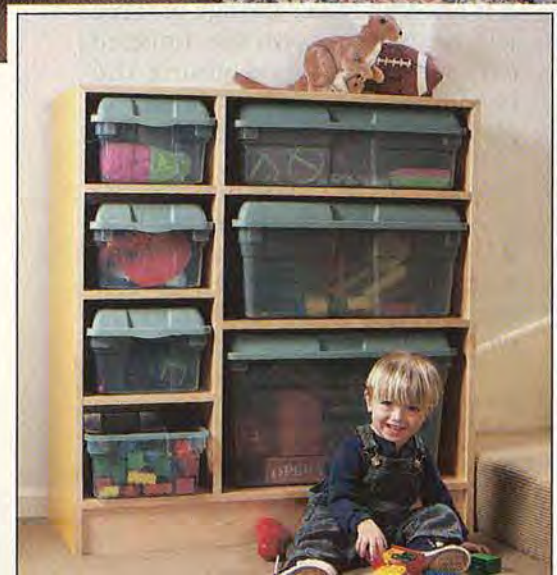

Crafts, toys, woodworking supplies, you name it, and you probably can store it in this simply made shelving unit. Designed around plastic, lidded containers found at most home centers, this dustproof storage system is an organizer's dream come true.

Print this article

Note: *We used Rubbermaid HiTop Storage Boxes for our shelves. See the Front View for the stock numbers of the boxes we used. Purchase locally or see the Buying Guide for a mail-order source. Due to the wide range of storage containers available, you may wish to customize our design. We allowed for ¼" clearance on each side of each box and ½" clearance on top. The fronts of the storage boxes sit flush with the front of the assembled unit.*

1 Rip and crosscut the sides (A), partition (B), top and bottom (C), and shelves (D, E) to the sizes in the Bill of Materials.

2 Mark the locations, and cut the dadoes and rabbets in the sides and partition where dimensioned on the Parts View drawing on the *WOOD PATTERNS®* insert in the center of the magazine. Double-check the marked locations of the shelf dadoes in the sides (A) and partition (B) before cutting.

3 Dry-clamp the assembly together, and drill the mounting holes. Then, glue and screw the assembly together, checking for square. Make certain that all the parts are flush on the front and back.

4 Cut the front and back base pieces (F) to size, and glue and screw them in place. The outside surface of each base piece should be flush with the edges of the plywood carcase.

5 Cut the stock for the banding and cleats (G–L) to size plus 1" in length. Cut and miter-cut the side banding (G) and top banding (H) to length, and glue and clamp them in place. Add banding pieces I and J next, followed by the banding (not cleats) K and L.

6 Fill all counterbores and the exposed plywood edges. Sand the

Storage

assembly and filled areas smooth. Mask the plywood surfaces at the joint between the plywood and banding.

7 Apply two coats of polyurethane to the banding and base where shown in the opening photo and to the cleats (still unattached). Then, mask the clear coated areas, and prime and paint the plywood pieces (we used yellow enamel).

8 Position the storage boxes flush with the front of the unit. Screw the cleats (K, L) in place where shown on the Rear Cleat detail.

CUTTING DIAGRAM

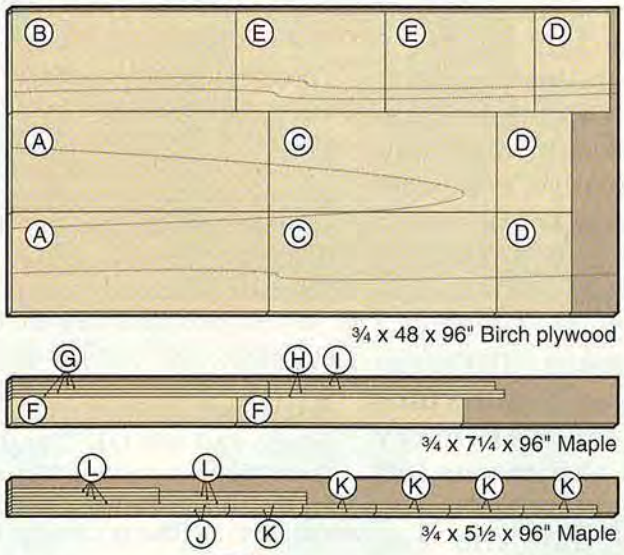

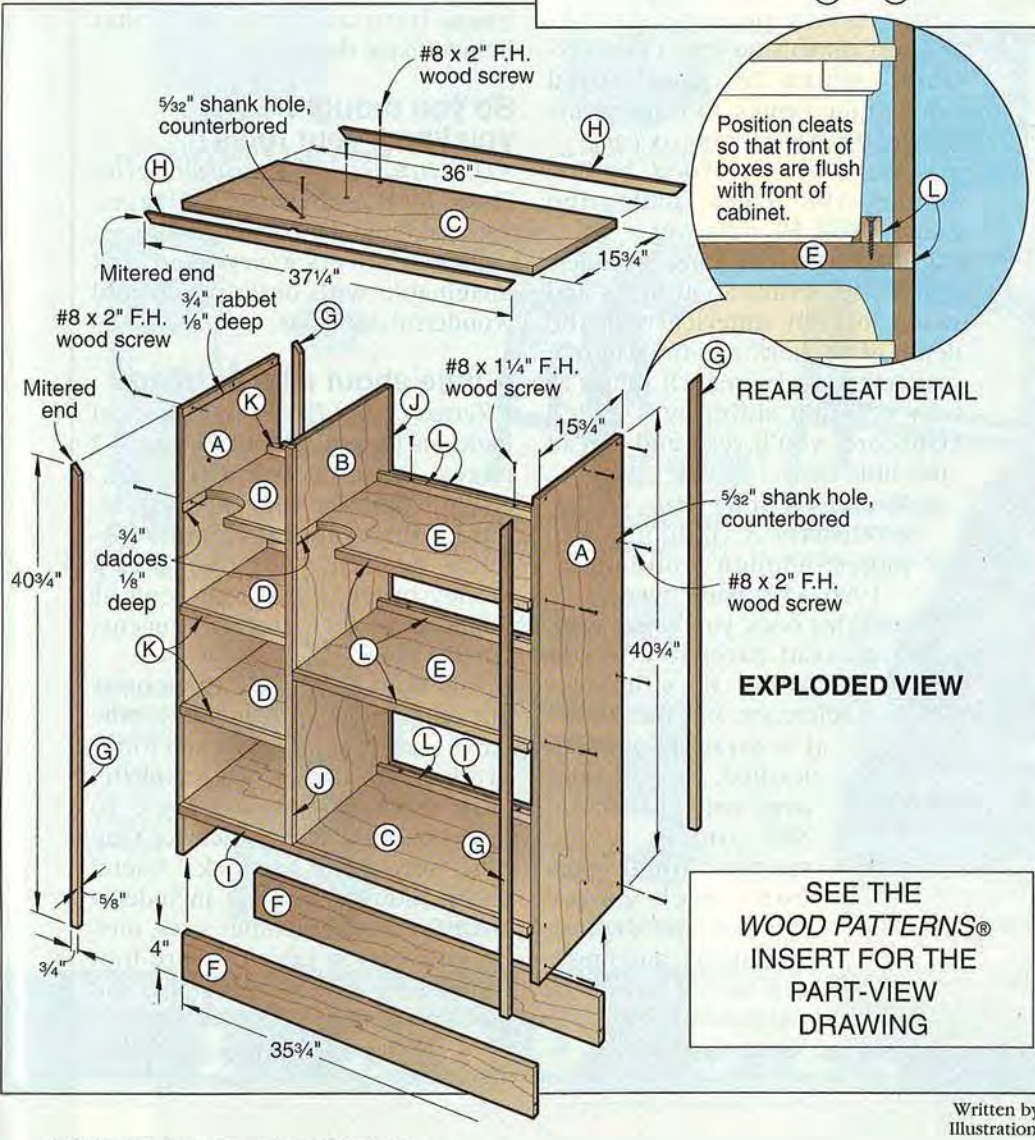

SEE THE *WOOD PATTERNS®* INSERT FOR THE PART-VIEW DRAWING

Bill of Materials

Part	Finished Size* T	W	L	Matl.	Qty.
A sides	¾"	15¾"	40¾"	BP	2
B partition	¾"	15¾"	35½"	BP	1
C top & bottom	¾"	15¾"	36"	BP	2
D shelves	¾"	15¾"	11⅞"	BP	3
E shelves	¾"	15¾"	23⅝"	BP	2
F base	¾"	4"	35¾"	M	2
G* banding	⅝"	¾"	40¾"	M	4
H* banding	⅝"	¾"	37¼"	M	2
I* banding	⅝"	¾"	35¾"	M	2
J* banding	⅝"	¾"	35¼"	M	2
K* banding & cleats	⅝"	¾"	11⅝"	M	10
L* banding & cleats	⅝"	¾"	23⅜"	M	7

*Cut parts marked with an * oversized. Trim to finished size according to the how-to instructions.

Materials Key: BP–birch plywood, M–maple.

Supplies: #8×1¼" and #8×2" flathead wood screws, primer, paint, clear finish.

Buying Guide

Rubbermaid HiTop Storage Boxes. Available in Agean (light green) or white. Check your local retailer or contact Everything Rubbermaid, 115 South Market Street, Wooster, OH 44691. Or call 330/264-7119 to order.

Written by Marlen Kemmet Project Design: Jan Hale Svec
Illustrations: Roxanne LeMoine Photographs: Bill Hopkins

Good Reads

Terrific books for your holiday gift list

The books on this page may not all rank as best-sellers. They do, though, represent some informative, enjoyable reading about trees, wood, tools, woodworkers, and woodworking. As *WOOD*® magazine's features editor, I research many different subjects for each of the nine issues we publish every year. Often that means lots of reading. Here's hoping that some day you can spend a few hours with each of my selections.

Peter J. Stephans

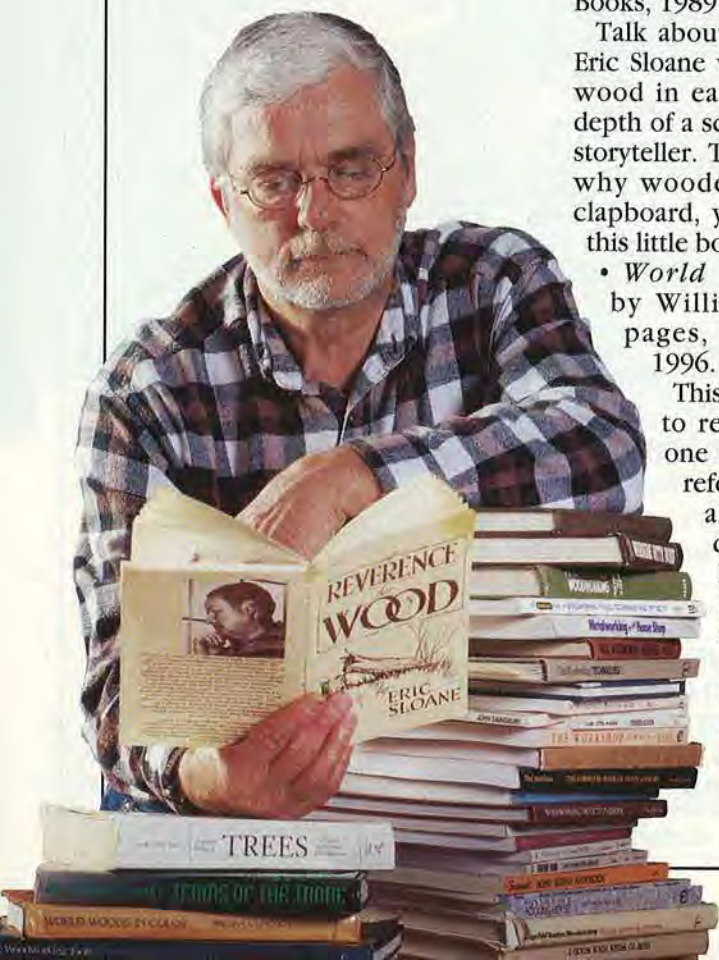

Trees tell many a story

• *A Natural History of Western Trees,* 600 pages. *A Natural History of Trees, Eastern and Central North America,* 750 pages. Both by Donald Culross Peattie, Houghton Mifflin Company, 1991. $20 each, softcover.

If you love trees and their place in history, you'll really enjoy these references. The author cites descriptive characteristics, anecdotes, and tall tales, and spins them all into fascinating stories perfect for armchair reading. For instance, of the sycamore Peattie writes, "So the pioneer cut trunks of great dimension into cross sections, which he then bored through the center, to make primitive solid wheels for his ox cart."

• *A Reverence for Wood,* by Eric Sloane, 108 pages, Ballantine Books, 1989. $9, softcover.

Talk about romancing a reader! Eric Sloane writes about trees and wood in early America with the depth of a scholar and the flair of a storyteller. To learn such things as why wooden siding was called clapboard, you'll read and reread this little book.

• *World Woods in Color,* by William A. Lincoln, 320 pages, Linden Publishing, 1996. $50, hardcover.

This book you won't want to read cover to cover in one sitting. It's strictly for reference, but the material is straightforward, detailed, and includes large color photos of 300 or so wood species. You'll learn how each wood behaves in drying, machining, and finishing. An expensive but informative shop reference volume.

Here's how they did it back then

• *Old Ways of Working Wood,* by Alex Bealer, 256 pages, Book Sales, 1996. $10, hardcover.

Have you wondered how our pioneer forefathers managed to build all they did without power tools? Well, author Bealer tells and shows you in this superb book. Pen-and-ink illustrations are simple but effective. This rates as a highly interesting text that helps you gain new appreciation for everything from a split-rail fence to a post-and-beam barn and the tools that helped make them.

So you thought you knew your tools?

• *Dictionary of Woodworking Tools,* by R.A. Salaman, 546 pages, Astragal Press, 1997. $40, softcover.

Salaman covers every hand tool imaginable with descriptions and wonderful drawings.

A little about a lot of things

• *Terms of the Trade,* by editors of Random Lengths Publications, 352 pages, Random Lengths, 1993. $39.95 ppd. in U.S., hardcover. (Order direct by calling 541/686-9925, or send your check or a money order to Random Lengths Publications, P.O. Box 867, Eugene, OR 97440-0867.)

This book is really a dictionary, but unique in that it includes only terms used in the logging and forest products industry. An example: "**Pig iron.** Hardwood logs, so called because they're heavier than pine, spruce, or hemlock." Useful information in the back includes a chart for dressed lumber sizes, metric conversion tables, board-foot volumes for dimensional stock, and much more.

Photographs: Hetherington Photography

GRIZZLY INDUSTRIAL

PURVEYORS OF FINE MACHINERY

FINE WORK DEMANDS FINE TOOLS

No matter what your level of expertise, GRIZZLY INDUSTRIAL offers heavy-duty woodworking equipment that will transform raw lumber into personal works of art.

LEASING & FINANCING AVAILABLE
Call for Details

ALL MACHINES F.O.B. OUR WAREHOUSE

Grizzly INDUSTRIAL, INC.

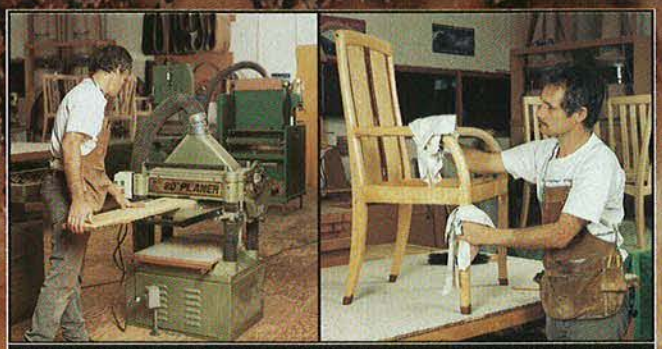

"My Grizzly 20" planer has been a real workhorse in my shop and has planed over 200,000 board feet over the last five years with no problems. It required very little set-up when I bought it and has stayed in good adjustment ever since!" - Al Rosen

10" HEAVY-DUTY TABLE SAW
MODEL G1023
SPECIAL PRICE $695.00

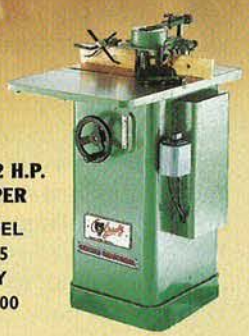

1-1/2 H.P. SHAPER
MODEL G1035
ONLY $449.00

Shown with optional wing.

6" X 47" HEAVY-DUTY JOINTER
MODEL G1182Z ONLY $395.00

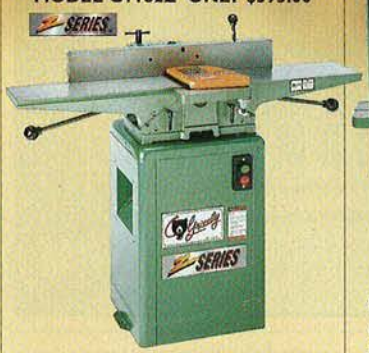

HEAVY-DUTY COMBO SANDERS
6" X 48" BELT - 12" DISC
MODEL G1183 -3450 R.P.M.
ONLY $399.00
MODEL G1276 -1725 R.P.M.
ONLY $439.00

HEAVY-DUTY 16" BANDSAW
MODEL G1073
ONLY $595.00

10" HEAVY-DUTY TABLE SAW
MODEL G1022Z ONLY $449.00

VARIABLE SPEED WOOD LATHE
MODEL G5979 ONLY $295.00

HOLLOW CHISEL MORTISER
MODEL G3183
ONLY $225.00

G4008/9 MOTOR MADE IN USA!

HEAVY DUTY BENCH-TOP DRILL PRESS
MODEL G4008
ONLY $189.95

HEAVY DUTY FLOOR DRILL PRESS
MODEL G4009
ONLY $239.95

OSCILLATING SPINDLE SANDER
MODEL G1071
ONLY $495.00

12" PLANER
MODEL G1017 ONLY $399.95

20" PLANER
MODEL G1033 ONLY $1,295.00

CALL TODAY FOR YOUR FREE 1998 WOODWORKING CATALOG — ORDER 24 HOURS A DAY!

189798658

1-800-523-4777

CUSTOMER SERVICE: (717)326-3806 FAX: (800)438-5901 WEB SITE: www.grizzlyindustrial.com

77B

MEDIA CODE

VISIT OUR 3 SHOWROOM LOCATIONS:

1821 Valencia St., Bellingham, WA — 4651 Hickory Hill Rd, Memphis, TN — 2406 Reach Road, Williamsport, PA

Circle No. 860

"All my tools should be this good!"

The Accu-Miter® is a professional miter gauge that makes perfect angles easily. Shot-pin action assures dead-on accuracy for common angles — plus a precise protractor scale for everything in between!

We do not recommend operating without the saw blade guard, as is shown here.
US Patent #5,038,486

Optional accessories: manual clamp– pneumatic clamp– 3/8" x 3/4" miter bar–

JDS COMPANY

Precision Woodworking Equipment

Call or write for our free brochure.

800 Dutch Square Blvd., Suite 200, Columbia, SC 29210
1-800-382-2637 / SC 803-798-1600

$149

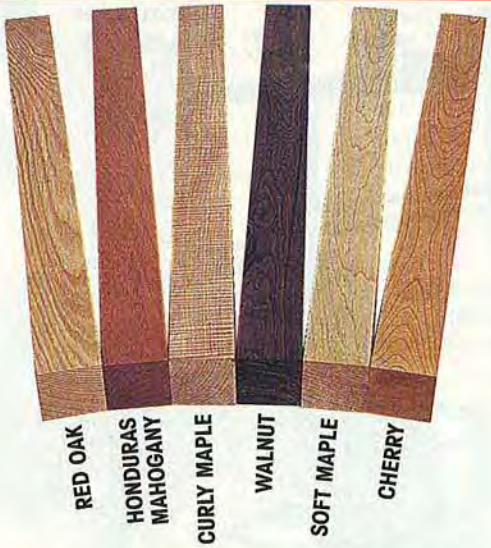

SOLID 3" x 3" SQUARES

Available in (3) Lengths: 17" • 22" • 30"

Surfaced Hit or Miss to 2 15/16" Square

Kiln Dried to 6–8%

FREE CATALOGUE

Adams Wood Products™ L.T.D., L.P.
974 Forest Drive, Morristown, TN 37814 Dept.M43
Factory/Office 5436 Jeffrey Lane
Phone 423-587-2942 • Fax 423-586-2188

Circle No. 1002

PRODUCTS THAT PERFORM SHOP TESTED

Low-priced lathe shows mettle in machining

PRODUCT SCORECARD

Central Machinery 7×10" precision mini lathe no. 33684-1

Performance	★ ★ ★ ★ ☆
Price	$369.99
Value	★ ★ ★ ★ ★

Harbor Freight Tools, 3491 Mission Oaks Blvd., Camarillo, CA 93011-6010, call 800/423-2567, fax 800/905-5220. http://www.harborfreight.com

If you want to try metal turning but balk at spending $1,000 or more for the lathe, here's a low-buck route into metal machining. For about $400, Central Machinery's 7×10" mini metal lathe gives you big-lathe capabilities on a small scale.

With over 1,000 hours' experience on a big metal-turning lathe, I was curious to see what this little machine could do—and how well.

The lathe offers adequate capacity for lots of small jobs—turning metal or plastic wheels for toys or outdoor projects, bushings for wheels and pivots, or pulls and knobs, for instance. You could turn straight-bodied wooden pens and pencils on it, too.

The three-jaw chuck features interchangeable inside and outside jaws. The 3"-diameter chuck takes stock up to 3" in diameter, but works best with materials 1½" or smaller. Instead of threading onto the spindle, the chuck bolts to an integral flange on the spindle. The tailstock bore carries a standard no. 2 Morse taper.

On first inspection, the cast-iron machine appeared to be solid and well built, although a few components seemed somewhat crudely finished. The chuck ran true with no runout when I checked it with a dial indicator. Hand controls worked nicely, though they weren't as silky smooth as the ones on my big metal lathe.

I was amazed by the number of features on this little tool—forward and reverse power feed, forward and reverse rotation, thread-cutting capability with changeable gears, variable-speed motor with high- and low-range gearing, and more.

I turned steel, aluminum, and wood, and achieved excellent results on all. The mini lathe made cuts as clean and accurate as my big lathe. It was fun to work with, too. If you need—or just want—to turn small metal parts, you'll enjoy this tool very much.

—Tested by Bob McFarlin

Print this article

Continued on page 96

GET MORE

Detail sander, power scraper and oscillating saw all in one tool.

GET MORE

The new MultiMaster is three tools in one: detail sander, scraper and flush-cut saw.

Detail Sander

The MultiMaster's patented oscillating motion and special triangle sanding pad permit aggressive sanding along delicate edges and in tight corners.

Flush Cut Saw Blade

Smoothly undercuts door jambs for floor coverings. Plunge cuts into wall board. Cuts wood, plaster and PVC. But because it oscillates, it won't cut you.

Rigid Scraper

Easily removes old putty, caulking and flooring adhesives. Great for scraping paint and varnish or lifting linoleum.

Oscillation

Only the MultiMaster oscillates at a rate of 21,000 strokes per minute in a 3.2 degree arc.

DO MORE

Scrape. Sand. Saw.

SPEND LESS

The new MultiMaster. Best pricing ever.

Until now, a Fein detail sander plus scraper and flush-cut saw would have cost you over $300. Now, while supplies last, the MultiMaster package includes all of these accessories, and the price is under $200*. It's the best Fein value ever. Want a MultiMaster now? Simply call for immediate delivery from a participating Fein dealer near you. To learn more about the MultiMaster, ask for our free brochure and poster.

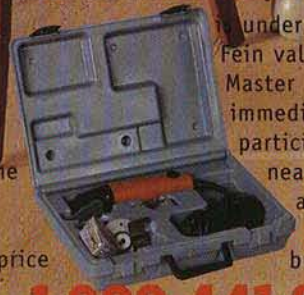

CALL 1-800-441-9878

Circle No. 37

*Participating Fein dealers only

Kitchen design: Lee Wanasetija, CKD, Kitchens by Design, Plainview, NY/Photo: Carol Bates

OPTIONAL ACCESSORIES

Get even more. The optional Professional Kit includes a carbide rasp, a grout-cutting saw blade, and a segment knife.

Carbide Rasp

Quickly grinds paint, mastic, stone and concrete. Won't load up.

Grout-Cutting Saw

Blade cuts grout to remove damaged tile without breaking surrounding tiles or creating excessive dust.

Segment Knife

Easily slices rigid materials like floor tiles, linoleum, carpet, plastic and leather.

The Fein MultiMaster is a true multi-purpose tool that saves hours of time. With the MultiMaster, finishing is just the beginning.

Finishing is just the beginning.

For All Your Woodcarving & Sign Carving Needs

Terrco provides a full line of machine carving and sign carving equipment. Beginning models are the T-110 single spindle bench carver and our CM614 single spindle sign carver.

Intermediate models include the K-Star, a two-spindle heavy duty bench model, and the Northstar, a heavy duty floor model available in one to eight spindles.

Our advanced model is our Master Carver series, which is an extremely heavy duty floor model with from eight to forty spindles.

Write or call for more information.

Terrco, Inc.
222 1st Ave. NW
Watertown, SD 57201
USA
(605) 882-3888
Fax (605) 882-0778

Model T-110 Dupli-Carver

Model CM614 Sign Carver

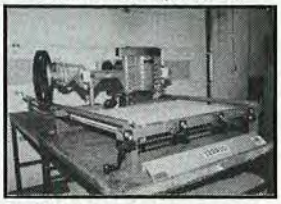

Multi-Spindle Carving Machine

Circle No. 2175

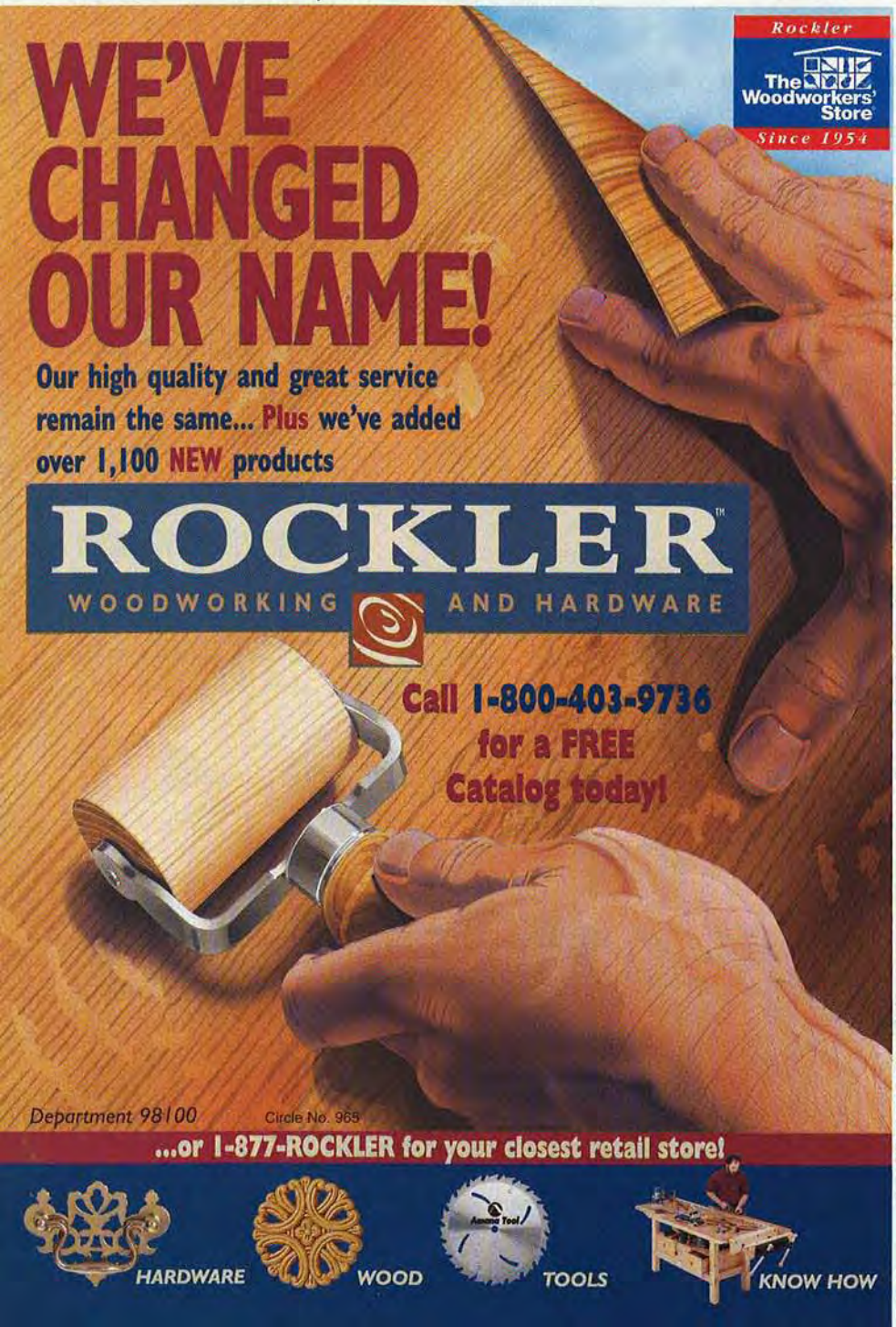

PRODUCTS THAT PERFORM — SHOP TESTED

Continued from page 94

PowerGrip Clamps work one-handed

Bessey recently added a squeeze-grip lever for one-handed adjustment to its traditional all-steel bar clamp. That's great, but the engineers at Bessey also managed to give the PowerGrip Clamp all the clamping force of the original.

Each squeeze of the lever on the PowerGrip Clamp moves the clamping head ¼", and you can exert enough pressure with just the lever for most properly joined glue-ups. However, if conditions require additional force, a twist of its traditional handle increases the pressure considerably.

In fact, I couldn't get the clamp to let go until I backed off the handscrew, then pressed the red release button. Pushing this button also lets you quickly slide the clamping head into position without squeezing the lever.

The 4" clamping depth should provide enough reach for most projects. While the PowerGrip Clamp carries a fairly high price tag, I feel the quality and capabilities of this tool justify the cost.

—Tested by Dave Henderson

PRODUCT SCORECARD

Bessey PowerGrip Clamps

Performance	★ ★ ★ ★ ★
Price	About $35 to $40 for 12" model About $40 to $45 for 24" model
Value	★ ★ ★ ★ ☆

American Clamping, 50 Franklin St., P.O. Box 399, Batavia, NY 14021. Call 800/828-1004.

Continued on page 98

How did I carve these?

Jesada Tools

I love the look of hand carved wood, but hand carved cabinets, doors and furniture have always been beyond my budget and quite frankly, intricate carving has always been beyond my skills. Besides the expense and skill required, traditional hand-carving has another limitation: it's very difficult to exactly duplicate a carving.

The 3D Carving system solves all of these problems, allowing any woodworker to produce perfect designs once, twice or a hundred times! With the 3D System, cabinet and furniture makers can add rosettes, corner designs and "hand carving" to their pieces.

Best of all, the 3D Carving System is very affordable, providing woodworkers with an excellent opportunity to add distinctive touches to their work.

Sincerely,
Carlo Venditto, President.

American Woodworker

"With a plunge router and (the) new Router Carver System, you can create intricate, repeatable carvings on doors, panels, drawers or any flat wooden surface." . . . American Woodworker.

Popular Woodworking

". . . thanks to an exciting new product called 3D Router Carver, anyone with a plunge router can produce handsome results in far less time than would be required using chisels to carve by hand." . . . R.J. DeCristoforo, Popular Woodworking

WOOD®

"In my tests of this system, I found it no more difficult than routing any pattern with a bearing- or bushing-guided bit. What really impressed me is that it took just 6 to 7 minutes to complete the pattern. . ." . . . Dave Henderson, WOOD® Magazine

With Jesada's 3D Router Carver™ System

What is the 3D Router Carver™ System?

The 3D Router Carver System is a unique patented method of producing intricate carvings quickly, economically and with complete repeatability. With the Carver Bit, Carver Templates and your 1/2" collet plunge router you can carve any flat wooden surface with designs that rival the work of a professional carver. In fact, the 3D Carver System's speed, accuracy and economy make it attractive to the professional or the serious amateur. Besides your router, the system requires three key elements:

1) The 3D Carver Bit: A 1/2" shank, carbide tipped V-Groove Bit is enclosed in a 45º guide bushing. A threaded shaft within the bit's shank allows precise depth adjustment of the tip of the V-Groove bit.

Bit Specifications: Shank: 1/2" Cut diam.: 3/4" Cut Angle: 45º Cut depth: 5/8" Guide bushing diam.: 1-7/8"

2) Template Holding Frames: Clamped or tacked to your workpiece, these frames hold the 3D Templates securely in place.

3) Carver Templates: A total of over 50 templates produce a host of designs for cabinet doors, panel doors, door rails and corners, drawer fronts and many other applications. Can you make your own templates? You'll find it pretty difficult unless you are a skilled patternmaker. Our templates feature intricate designs cut on computer-controlled machinery with precision that's difficult to match in the shop.

How does the system work?

Using the 3D Carver is easy. The bit is installed in the router (1/2" collet only) with the plunge mechanism unlocked so that the router can move up and down as you rout. The 45º bushing follows the slots in the template. As the slot gets wider, the router moves downward, so the v-groove gets wider. As the slot narrows, the router moves up and the groove gets narrower. That's it!

How do I get started? With our 3D Carver Starter Set!

This popular kit includes everything you need to get started with the 3D Router Carver. It includes the templates and holding frames to make the Classical Cabinet Door and Drawer designs shown at right, plus a 3D Router Carver™ Bit, complete instructions and a copy of the 3D Carver video.

499-010X
3D Carver Starter Kit: Classical Door & Drawer with 3D Carver™ Bit and a video!

List: $202.10 **SALE: $174.90**

After your Instant Rebate: **$164.90**

Classical Door. Carving size: 17-3/4" x 7-1/4", approx. carving time: 5 minutes

Classical Drawer. Carving size: 8-1/4" x 2-3/4", approx. carving time: 4 minutes

The 3D Carver System™ & Templates are protected by U.S. patent #5,146,965 & international patents.

Where can I learn more?

Order our 3D Carver Pattern Set or the Carver video! The **Pattern Set** includes full-size reproductions of all 52 designs printed on heavy paper stock that can be quickly removed from the binder.

3DC-900
Pattern Set, List: $20.00 SALE: $14.90

The **3D Carver Video** is the perfect introduction to this exciting tool. You'll see the system in action as the narrator offers a complete step-by-step explanation.

3DC-999
3D Carver Video List: $13.00 SALE: $10.00

Complete online catalog!
http://jesada.com
E-Mail: jesada@packet.net

Call for our Free Catalog

VISA MasterCard DISCOVER

$5.90 shipping & handling on all orders

To order, call toll-free 24-hours:

1-800-531-5559

Toll Free FAX: 1-800-870-7702

Export orders: (813) 891-6160 FAX: (813) 891-6259

JESADA TOOLS,
310 Mears Boulevard, Oldsmar, FL 34677

In Canada: 1-800-387-7005

In the U.K: 0800 371822

In Australia: 1300 301335

Circle No. 1335

Continued from page 96

Portable air filter gobbles sawdust at the source

Breathing sawdust-laden air isn't healthy. Plus, it settles all over you, your tools, and your projects. Now, Craftsman has another weapon in the war against workshop dust—a portable air filter.

With an air flow of 200 cubic feet per minute (CFM) the Craftsman Portable Air Filtration System grabs dust in a two-stage filter. A woven pad on the intake end catches most of the particles before the air then passes through a 5-micron filter bag and out the back. I found both filters easy to clean.

To test the machine's air-cleaning capabilities, I ran it while sanding drywall joints in a 10×15×8' room. This generated about as much dust as sawing with a tablesaw, and most of it went airborne. Even in this relatively small space, I found the portable filter less effective than a standard whole-shop air cleaner, which would handle about twice the volume of air.

But, airborne dust is difficult to capture with any filter. So the best approach is to trap dust at the source, before it gets into the air. With this in mind, I set the filter on my workbench, then raised some dust by sanding and power-carving nearby. Here, I found the filter easily caught up to 90 percent of the dust generated.

The built-in handle and compact size (12" diameter × 29" long) make the filter easy to carry right to where you're making dust. The machine can also be ceiling- or wall-mounted.

For whole-shop air cleaning, you can find better choices. But, the Craftsman Portable Air Filtration System proves ideal for situations where ducted dust collection isn't available.

—Tested by Bob McFarlin

Continued on page 108

PRODUCT SCORECARD

Craftsman no. 16995 Portable Air Filtration System

Performance	
Whole-shop air cleaner	★★☆☆☆
Benchtop dust collector	★★★★☆
Price	$159.99
Value	
Whole-shop air cleaner	★★☆☆☆
Benchtop dust collector	★★★★☆

Available through the Sears Craftsman Power and Hand Tools catalog. Call 800/377-7414.

Own a Complete Home Shop

It's 10 tools in 1!

Do the work of 10 tools with 1 compact, affordable machine

- Work on wood, metal, or plastic
- Easy, fun to use
- Built to last a lifetime

The perfect friend to relax with, the perfect partner to help get work done

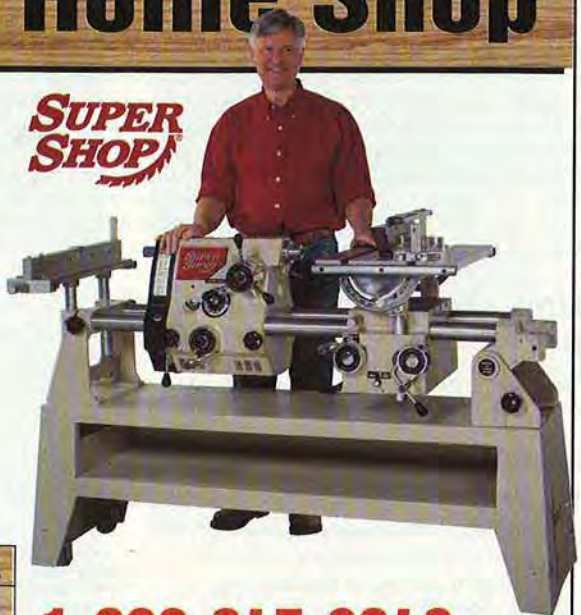

WOOD		METAL
34″ Lathe		Lathe
12″ Table saw	Router	Mill
12″ Disc sander	Shaper	Drill
Horizontal boring		
Drill press		

OWNERS SAY:

"This isn't the Cadillac®, this is the Mercedes® of combination woodworking tools. My old 5-in-1 is going to be very lonely over in the corner."

—Edward Zych (TN)

PLUS! Each machine includes:
Premium Tool Pak • Toll-free Helpline
2-year Warranty

1-800-345-6342

Ask for operator WDW

or write SuperShop
Dept. WDW
PO Box 1517
Ann Arbor, MI 48106-1517

FREE Info Pak Call today!

Circle No. 100

Take your hobby on the road.

NEW! Enviro-Plus® Stripping & Refinishing Program

As a Guardsman WoodPro franchise partner, you'll have confidence knowing you're backed by the largest producer of furniture finishes in North America, supplying over 500 furniture manufacturers. Your customers will also have peace of mind knowing that the same company who made the finish on their furniture is repairing and restoring it.

Finish Repairs

Structural Repairs

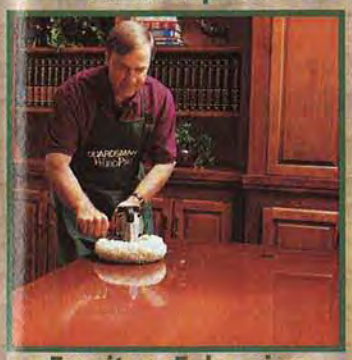

Furniture Enhancing

Upholstery Repairs

Cabinet Refurbishing

Deck Reconditioning

Initial Advantages

- Low Overhead
- Exclusive Territories
- Inventory Packages
- Training Programs
- Marketing Programs

Ongoing Advantages

- Field Support
- Regional Workshops
- National Advertising
- National Service Accounts
- R & D on New Products and Services

GUARDSMAN WoodPro®

The most trusted name in furniture repair.™

For information, call:

(800) 496-6377

In Canada: (888) 966-3232

www.guardsmanwoodpro.com

1998 Target Markets!

Dallas • Houston • San Francisco • Portland
Seattle • Las Vegas • Chicago • Miami • St. Louis
Kansas City • Nashville • Atlanta • Cincinnati
Pittsburgh • Baltimore • New York City • Boston

Investment range: $12,000 - $22,000.
Offer made by Prospectus only.
Unit & Master Franchises available worldwide.

LILLY A division of Lilly Industries, Inc.

100% SATISFACTION GUARANTEED!
★ FREE SHIPPING! FOR ALL ITEMS SHOWN BELOW!

HARBOR FREIGHT TOOLS

ORDER FROM OUR WEB SITE FOR EXTRA SAVINGS!
http://www.harborfreight.com

BOSCH — QUANTITIES LIMITED

3/8", 12 VOLT CORDLESS DRILL/DRIVER W/ KEYLESS CHUCK Bosch 3310KR

- 0-400 low, 0-1200 RPM, variable speed reversible
- 225 in. lbs. maximum torque; 16 settings
- Better grip & longer, more comfortable use with new "T" handle
- Includes: 1 hour charger, 1 battery, driving bit & case
- Factory reconditoned, factory perfect

~~$89.99~~ $75.99
ITEM 51646-5MGA

3/8", 14.4 VOLT CORDLESS DRILL/DRIVER Bosch 3610K-146

- 255 in. lbs. maximum torque; 15 settings
- 0-450, 0-1200 RPM, variable speed reversible
- Includes: 2 amp hour battery, 1 hour charger, & case
- Factory reconditoned, factory perfect

~~$99.99~~ $85.99
ITEM 51730-4MGA

OLYMPIA-TOOLS

THE MOST USER FRIENDLY TAPE MEASURE YOU WILL EVER FIND!

E-Z READ™ TAPE MEASURES

Graduated in 32nds, tapes have 1/8" calibrations clearly marked, inch and foot increments in red and stud markings in red.

1" x 33 FT. $8.99
ITEM 38262-1MGA

1" x 25 FT. $4.99
ITEM 37570-3MGA

3/4" x 16 FT. $3.99
ITEM 38261-2MGA

CENTRAL MACHINERY

16" SCROLL SAW

- Precision milled 14-1/2" x 8" cast aluminum table tilts 0° to 45°
- Uses pin end blades, 5-1/2" long
- Heavy duty cast iron frame and base reduce vibration
- 1/8 HP, 110V, .83 amps
- 1750 SPM blade speed
- 7/8" blade stroke

~~$69.99~~ $49.99
ITEM 37908-2MGA

FOOT SWITCH WITH GUARD
Ready to use. Steel housing and 8 ft. cord.
ITEM 37784-1MGA $9.99

CENTRAL MACHINERY

12" DIRECT DRIVE BENCH TOP DISC SANDER

Get sharp, accurate finishes without burning or marring. Direct drive disc won't slip. Table tilts to 45°; 2" dust collection outlet; fan-cooled brushless motor; miter gauge, base pads prevent creeping; safety switch. Includes 60 grit, 12" sanding pad.

- 1 HP, 120V, 14.0 amps
- No load speed: 1793 RPM
- Wheel diameter: 12" • Base: 13" x 10"
- Shipping wt:: 92 lbs.

~~$99.99~~ $89.99
ITEM 37297-3MGA

12" SANDING DISCS

GRIT	ITEM	PACK OF 2
36	38001-1MGA	$6.99
60	37958-1MGA	$6.99
120	37959-1MGA	$6.99
240	37960-1MGA	$6.99

Pittsburgh — LIFETIME WARRANTY

2 PC. 3/4" HEAVY DUTY PIPE CLAMP

Constructed from heat-treated cast iron, these durable clamps keep your work rock steady. Just screw the handle side onto a 3/4" threaded pipe and slide the spring loaded end on. You're ready to go! Pipe not included.

- Handle screw operating range: 2-1/8"
- 1-1/2" throat depth
- Weight: 2-7/16 lbs.

ITEM 31255-1MGA $3.99

1/2" PIPE CLAMP

- 1-1/2" throat depth
- Weight: 1-4/5 lbs.

ITEM 37056-2MGA $2.99

LIMITED SUPPLIES

3" BOSCH STYLE JIGSAW BLADES

High performance blades with Bosch style shanks. Gives maximum quality cuts every time (Not shown).
~~$1.99~~ PK. OF 5 99¢
ITEM 36339-3MGA

A. RECIPROCATING SAW BLADES

Contains a grab bag selection of saw blades for your reciprocating saw. Contents vary for each package.
ITEM 36340-4MGA ~~$3.99~~ PK. OF 5 $1.99

B. 5 PC. JIGSAW BLADE GRAB BAG BLACK & DECKER™

High speed steel. Types vary; All have 1/4" universal shanks
ITEM 50518-2MGA ~~$1.99~~ 99¢

CENTRAL MACHINERY

6" INDUSTRIAL RABBETING JOINTER INCLUDES STAND

- Infeed table size: 22-1/2"
- Outfeed table size: 19-1/2"
- Motor: 1 HP, 110V, 4 amp, 4900 to 5900 RPM cutter head speed
- Maximum depth of cut: 3/8"

~~$279.99~~ $199.99
ITEM 30289-4MGA

REPLACEMENT BLADE SET $15.99
ITEM 33271-2MGA

CENTRAL PNEUMATIC — CONTRACTOR SERIES

LIMITED QUANTITIES

18 GAUGE AIR BRAD NAILER

This unit has the features you need: safety trigger, durable aluminum magazine, easy jam clearance, stainless steel driver and cylinder.

- 55-95 operating PSI
- 1/4" NPT inlet • 18 gauge brads
- 3/8" to 1-1/4" brad length capacity
- 100 brad maximum capacity
- Tool weight 2-3/4 lbs.

~~$45.99~~ $29.99
ITEM 31308-8MGA

18 GAUGE BRADS (PACK OF 5000)

LENGTH	ITEM	PRICE
1"	33206-1MGA	$5.99
1-3/16"	33207-2MGA	$6.99

50 FT. X 3/8" AIR HOSE
1/4" NPT; 150 PSI working pressure, 200 PSI burst
ITEM 00667-2MGA $9.99

CENTRAL MACHINERY

- VARIABLE SPEED
- BIG 12" THROAT
- 3/4 HP

12" BANDSAW

Precision three-wheeled design cuts material up to 12" wide and makes bevel cuts from 0° to 45°. Electronic variable speed from 0 to 2645 feet per minute. Includes miter gauge. Blade sold separately, below.
115V; Table: slotted cast aluminum: 13-1/2" x 13-1/2"; Work capacity: 12" x 4-5/8"H; Requires 62" blade; Overall dimensions: 25"L x 13-1/2"W x 23-3/4"H; Shipping weight: 32 lbs.

ITEM 01629-3MGA $89.99

BANDSAW BLADE
• 6 TPI
ITEM 31236-5MGA $4.99

TUNGSTEN CARBIDE TIPPED ROUTER BIT SETS

- 1/4" shanks
- Individually organized storage cases

15 PC. ASSORTED BITS

1-1/4" rabbeting♦, 1-3/8" cove♦, 1-1/16" roman ogee♦, 1-1/4" rounding over♦, 1/2" flush trimming♦ 1-3/16" 45° chamfer♦, 1/2" dovetail, 3/4" straight, 1/2" straight, 3/8" V-groove, 1/4" combination panel, 1/4" straight, 1/2" mortising, 1/4" cove, 1/8" straight. ♦Includes pilot bearing

ITEM 31164-5MGA $29.99

4 PC. ROUNDING OVER BITS
• 1-5/32" long shanks • 2 flutes each
Sizes: 1/8", 1/4", 3/8" and 1/2" with pilot bearing tips
ITEM 33078-7MGA $15.99

SAVES GAS & MONEY

LIMITED QUANTITIES

16,000 BTU INFRARED LP GAS HEATER

Infrared design heats where it's pointed instead of the atmosphere, saving you money by saving you gas. Can be oriented in any desired direction. Easily transportable or permanently mountable. O.D.S. (Oxygen Depletion Sensor) analyzer shuts the heater down when oxygen is lowered to an unsafe level. Equipped with a thermocouple that shuts the system off if it gets too hot. Perfect for garage heating; not designed for living areas. LP bottle shown not included.
Minimum setting 10,000 BTUs/hr.
Maximum setting 16,000 BTUs/hr.

ITEM 33745-2MGA ~~$39.99~~ $36.99

★ Within the 48 States / $3.95 handling on all orders. No per item shipping and handling charge.

4132

Call To Order or Ask for Free Catalog:
Order 24 Hours a Day/7 Days a Week
Most Phone Orders Shipped in 48 Hours

FAX TOLL FREE: 1-800-905-5220

1-800-423-2567

CHARGE IT! DISCOVER VISA MasterCard

Or Send Check or Money Order to: Harbor Freight Tools, 3491 Mission Oaks Blvd. Box 6010, Camarillo, CA 93011

Circle No. 46

FREE SHIPPING!

FOR ALL ITEMS SHOWN ON THESE TWO PAGES!

LOW PRICE GUARANTEE! • PRICES EFFECTIVE THRU 5-1-99

WE'LL BEAT ANY COMPETITOR'S PRICE ON ANY IDENTICAL ITEM - EVEN IF IT'S AN ADVERTISED SPECIAL

ORDER FROM OUR WEB SITE FOR EXTRA SAVINGS!
http://www.harborfreight.com

EASY ONE-HANDED OPERATION

AUTO ADJUSTING PLIERS

Easily adjust using only one hand and get the same range as your tongue and groove pliers. No more fumbling or clumsy adjusting. Unlike groove joint pliers, these automatically adjust to the size you need. Great for plumbing, electrical and automotive work.

7" STRAIGHT JAW
- Adjust up to 1"

~~$14.99~~ $6.99
ITEM 38389-1MGA

9" V-NOTCH JAW
- Adjust up to 1-1/2"

~~$19.99~~ $11.99
ITEM 38390-1MGA

CHICAGO Electric Power Tools

TRIM ROUTER

Now you can tackle those jobs that were too fine or exacting for a standard router. This compact router weighs only 4 lbs. for easy operation. Includes a straight and adjusting conductor to assist in trimming and engraving in both straight and circular patterns.
- 1/4" collet • 8-1/2" overall length
- 110V, 3-1/4 maximum amp draw
- 30,000 RPM no load speed
- 4 lbs. tool weight

~~$45.99~~ $36.99
ITEM 33833-6MGA

NUGARD

THREE VIAL LASER TORPEDO LEVEL

No more fiddling around with line levels. Red laser projects level marks over 100 feet away – with pinpoint accuracy! Perfect for masonry, fencing, landscaping and cabinet work. Constructed from brass annodized aircraft aluminum. Three unbreakable vials for horizontal, vertical and 45°. V-groove for pipes. Threaded mount for tripods.
- Compact...only 6-3/4" long
- Shock and water-resistant for years of professional use • FDA certified
- Accurate to 1/4" at 100 ft.
- 2 AAA batteries last up to 10-12 hours with continuous use

ITEM 37760-5MGA $59.99

SAVE UP TO 50%

7-1/4" ADJUSTABLE DADO BLADES

Carbide steel tips last up to 50 times longer and can be resharpened. High speed steel blades are denser and stronger for greater impact resistance. Does not have to be removed from saw to adjust cutting width.
4500 max. RPM; 1" arbor with 5/8" adapter

TEETH	ITEM	PRICE
CARBIDE DADO BLADES		
24	36911-3MGA	$12.99
40	36912-3MGA	$14.99
HIGH SPEED STEEL DADO BLADES		
24	36913-2MGA	$8.99
40	36914-4MGA	$9.99

Jacobs® A B

QUALITY REPLACEMENT CHUCKS

These chucks are used as original equipment on more drills than any other chuck. Through-hardened jaws; Thoroughly inspected and backed by Jacobs® warranty; 1/2" chuck accepts bits as small as 5/64"; 3/8" chucks: 1/16"; Comes with free key (except for 33051); All have standard SAE thread: chucks that mount to 3/8" drills are 3/8 - 24; those that mount to1/2" drills are 1/2 - 20

A. 1/2" REPLACEMENT FOR 3/8" MOUNT Jacobs® SM8K61
- Mount on a 3/8" drill for a widervariety of drill bits

ITEM 05733-3MGA ~~$8.99~~ $7.99

B. 3/8" KEYLESS

ITEM 33051-2MGA ~~$8.99~~ $7.99

WE CARRY OVER 4000 ITEMS!

CALL TODAY FOR A FREE CATALOG SUBSCRIPTION!

SKIL Skil 5150

LIMITED QUANTITIES

7-1/4" CIRCULAR SAW

- Maximum cut @ 90° 2-7/16",@ 45° 1-15/16"
- 10 amps, 2-1/3 HP, 4600 RPM
- Handy scales and cutting guide
- Factory reconditioned, factory perfect

~~$39.99~~ $32.99
ITEM 06188-0MGA

7-1/4" CARBIDE TIPPED CIRCULAR SAW BLADE
Precision ground M2 molybdenum tips for a sharp cutting edge.
5/8" arbor, 24 tooth blade; Heat vents, expansion slots
ITEM 38534-0MGA $2.49

DELTA® Delta 33-060

LIMITED QUANTITIES

SIDEKICK® FRAME & TRIM SAW

Aggressive 12 amp, 5500 RPM gear-driven motor for tough cutting jobs. Equipped with a carbide tipped 6-1/2" diameter blade. Crosscuts, miters, bevels, cuts compounds - makes just about any cut (except rip). Horizontal D-handle design for positive, full grip control. Two rigid stainless steel rods minimize deflection and maximize accuracy.
Motor: 12 amps, 120V; Blade diameter: 6-1/2"; Arbor: 5/8"; Speed 5500 RPM; Capacity: Cut-off at 90°: 12"; Cut-off at 45° miter: 9-1/2"; Depth of cut at 90°: 1-3/4"; Depth of cut at 45°bevel: 1-5/8"; Positive miter stops: 0°, 22-1/2°, 31.62°, & 45°; Weight: 42 lbs.

ITEM 52880-7MGA $249.99

DELTA® Delta 22-540

12" PORTABLE PLANER

- Long lasting high speed steel, reversible, double edged knives
- Precise thickness scale conveniently located for easy reference
- Four precision ground columns to effortlessly raise and lower cutter head
- Includes removable table extensions, and fold away depth adjustment for easy transport
- Convenient carrying handles
- Factory reconditioned, factory perfect

26.2 FPM feed rate; Motor: 15 amp, 120V; Table size with extensions: 12-1/8" x 26"; Capacities: 12" width, 6" thick, 3/16" depth of cut; 8000 RPM, 16,000 CPM; 27-1/4" x 20-1/2" x 15" overall dimensions; 68 lbs. net weight

~~$299.99~~ $269.99
ITEM 06177-6MGA

NEW PLANER
~~$369.99~~ $329.99
ITEM 00258-5MGA

PLANER BLADES
ITEM 33075-3MGA $29.99

CENTRAL MACHINERY

5 SPEED BENCH DRILL PRESS

- 2" stroke, 8-1/4" swing
- Speeds: 620, 1100, 1720, 2340 and 3100 RPM
- 1/3 HP motor moves at 1720 RPM
- Table: 8-1/4" square • 1/2" chuck
- 8-1/4" maximum distance spindle to table
- 22-1/2" high, 47 lbs.

ITEM 05901-8MGA $44.99

DRILL PRESS WITH KEYLESS CHUCK
- No more lost chuck keys

ITEM 34231-4MGA $47.99

IRON HORSE Iron Horse TAWS1

HEAVY DUTY STEEL BASE ADJUSTABLE HEIGHT WORK SUPPORT

It's like having a third hand. Heavy duty steel base supports rugged plastic rollers. Use with table saws, miter saws, router tables, radial arm saws, and many other power tools. Height adjusts from 25" to 43" for maximum versatility. A must for any shop.

~~$19.99~~ $16.99
ITEM 02379-5MGA

CENTRAL MACHINERY

1" BELT/ 5" DISC SANDER

Remove the belt back plate and sand all types of curves and odd shapes. With the back plate in place, you can apply pressure for faster stock removal.
- Motor: 1/3 HP, 2.4 amp, 60 Hz, 110V, 3450 RPM • Dust collection
- Table: 5" x 5", tilts to 45°
- Belt length: 30", 3450 FPM belt speed
- Shipping wt.: 19 lbs.

~~$59.99~~ $45.99
ITEM 34951-3MGA

SANDING BELT CLEANER
- Increase the life of your sanding belts and discs up to 500%
- 8-1/2" x 1-1/2" x 1-1/2"

ITEM 30766-0MGA $3.99

★ Within the 48 States / $3.95 handling on all orders. No per item shipping and handling charge.

Call To Order or Ask for Free Catalog:
Order 24 Hours a Day/7 Days a Week
Most Phone Orders Shipped in 48 Hours

FAX TOLL FREE: 1-800-905-5220

1-800-423-2567

CHARGE IT! NOVUS VISA MasterCard

Or Send Check or Money Order to: Harbor Freight Tools, 3491 Mission Oaks Blvd. Box 6010, Camarillo, CA 93011

4132

Woodworker's Marketplace

This section features advertisers offering products by mail. Additional information can be found in the Woodworker's Resource section. Please contact the advertiser directly or use the Circle No. to the right of each ad to request information through the Woodworker's Resource envelope.

Print this article

MAKE YOUR OWN WIND-POWERED TOYS!

EASY-TO-MAKE WHIRLIGIGS
Anders S. Lunde
Easy-to-follow, illustrated manual features models for whimsical, wind-powered toys: Flying Puffin, Halley's Comet, Colonial Dame, more. Inexpensive to make; only simple tools needed. 112pp.8¾ x 11.
28965-6 Pa. $7.95

To Order: List title, author, and code number. Add $5.00 s & h. NY residents, add sales tax. Send to: Dover Publications, Dept. WM, 31 E. 2nd St., Mineola, NY 11501.
FREE Dover Crafts and Woodworking Catalog (59111-5) available upon request.

Circle No. 1118

The Japan Woodworker's Catalog is . . .

loaded with the best tools you can get your hands on. In our catalog you will find a huge selection of Japanese saws, waterstones, chisels, planes, carving tools, cutlery and books. Send $2.00 for our catalog and supplements during the next two years.

THE JAPAN WOODWORKER
1731 Clement E-32, Alameda, CA 94501
Phone 1-800-537-7820

Circle No. 190

Like Having A Lumberyard Right In Your Shop!

NOW! Plane, Mold, Sand and Saw with Infinitely Variable Power-Feed!
FREE FACT KIT
1-800-821-6651 ext. PW32
WOODMASTER TOOLS, INC., DEPT. PW32
1431 N. TOPPING, KANSAS CITY, MO 64120
www.woodmastertools.com

If you can trace a line... YOU CAN MAKE MONEY!

DO YOU...
- ✔Want Extra Income
- ✔Want to Work from Home
- ✔Hate Selling
- ✔Want Something that's *fun & easy* to do
- ✔Want a Tax Deductible Business

Call (800) 624-7415
Paragraphics Corporation
www.paragraphicscorp.com
1455 W. Center, Orem, UT 84058

CALL FOR A FREE DEMO VIDEO
(deposit required)

Circle No. 2160

BUILD A WOODEN SHIP MODEL!

Museum quality replicas, up to 4 feet long. Historically accurate kits contain laser cut wooden parts, metal and brass fittings, cotton sails, easy instructions.

Send $1.00 for 64 page color catalog.

Model Expo, Inc.
Dept. WDC8
PO Box 229140
Hollywood, FL 33022
© Model Expo, Inc. 1998

Circle No. 1075

FREE TOOL CATALOG
Helping You Become a Better Woodworker

highland hardware
Our giant tool catalog gives more than just manufacturer's specs. We provide detailed tool descriptions, useful techniques, as well as a schedule of educational seminars.
Call toll free for FREE catalog
1-888-500-4466
Visit us on the Internet at http://www.highland-hardware.com

Circle No. 870

Workshops • Garages

Manufacturer Direct
SAVE UP TO 45%
Special Limited Offer

EASY Do-It-Yourself Construction
Saves You Time & Money

27'x48' *$6,539*
$12,760 Value
Pckgs. include steel frames & endwalls, galv. sheeting, trim & complete assembly plans.
Some other sizes available

16 COLORS TO CHOOSE FROM!

MIRACLETRUSS®
1-800-663-0553
FAX 612-544-1835
www.miracletruss.com WOOD

FREE
288 Page Catalog!

VAN DYKE'S
RESTORERS®
Supplies for woodworkers and antique restorers

Featuring the Industry's most complete selection of:
- Period Hardware
- Reproduction Furniture Components
- Wood Appliques & Molding
- Trunk Hardware
- Period Furniture Kits
- Finishing Supplies, Glues, Fasteners and Much More
- Many Unique & Hard to Find Items

CALL 1-800-558-1234
OR WRITE
Dept. 60048 P.O. Box 278 Woonsocket SD 57385

Circle No. 2077

Free Workshops • Prizes • Hundreds of Products • Seminars by Mastercraftsmen

See the Widest Variety of Woodworking Products All Under One Roof!

★THE WOODWORKING SHOWS★
tools • supplies • education

THE NATION'S PREMIER WOODWORKING TOUR

VISIT THE SHOW NEAR YOU!

• Atlanta	• Dallas	• New Orleans	• Seattle
• Baltimore	• Detroit	• No. California	• So. California
• Charlotte	• Houston	• North Jersey	• St. Louis
• Chicago	• Indianapolis	• No. Virginia	• Tampa
• Cleveland	• Kansas City	• Phoenix	• Twin Cities
• Colorado	• Massachusetts	• Portland	• Winston-Salem
• Columbus	• Milwaukee	• San Diego	• plus others

Call for free brochure Monday - Friday 8:30 am - 5 pm Pacific Time
1-800-826-8257 or 310-477-8521 e-mail: woodshow@earthlink.net

Circle No. 2900

Be a Furniture Restoration Specialist

Discover Minuteman

Complete Shop Concept
Strip • Repair
Touch-Up • Fake Grain
Marbelize • Resilver • Refinish
Duplicate Parts • Repair Frames • Veneer

Why Minuteman?

- Proven, Low-Risk, Cash Return
- **Low Start-Up Costs; Expert Training**
- Environmentally Friendly System
- **Wholesale Supplies**
- Handy Sample Kits Available
- **Systems From $1,500-$11,000**
- 28 Years Experience; 3,000+ Shops

No Experience Necessary
♦ Part-Time, Full-Time ♦
Ideal for Men & Women

***FREE* 2-Day Business Exploration Seminar**
No Obligation to buy!
Register Now – Limited Seating!

Call For FREE Catalog
MINUTEMAN, INC.
Ste. 17, P.O. Box 8, Waterloo, WI 53594
1-800-733-1776

Circle No. 1661

Wiper Blade Sharpener!

Why Replace When You Can Sharpen?

Order Toll Free
800-380-3630

- Save Your Time and Money
- Keep Your Blades Up to 24xs Longer
- Improve Performance for a Safer, Streak & Squeak Free View

Code WD98

or Send Check or Money Order to Easy Sharp: 127 W. Fairbanks Ave. Suite 505 /Attn:Dept. WD98 Winter Park, FL 32789

Circle No. 1923

We've got quartz and mechanical clock movements, fit-ups, hardware, plans, tools and more! Call or write for your FREE catalog, #BHW2

S.LaRose,Inc.
3223 Yanceyville St.
Greensboro, NC 27405
Phone: (336) 621-1936 • www.slarose.com
E-Mail: SLAROSE@worldnet.att.net

Circle No. 2375

NEW!

Wireless Weather Stations

Installation made easy! Davis' Wireless Weather Stations use our new SensorLink™ to transmit data to a display console up to 400' away! Each station comes completely pre-assembled and includes sensors, a radiation shield, a weather-tight shelter, and a display console with receiver. All without running wires!

For a FREE catalog, call
1-800-678-3669

WMA1298 One-year warranty • 30-day money-back guarantee

Davis Instruments 3465 Diablo Ave., Hayward, CA 94545-2778
(510) 732-9229 • FAX (510) 732-9188 • sales@davisnet.com • www.davisnet.com •

Circle No. 1661

It's Your *TURN* To Make Pens In 2 Minutes

The Wood*Write* Mini-Lathe Model 160 (shown) comes assembled, mounted, aligned and ready to run. Complete with: 1/3hp AC Induction motor; 400-5700 rpm; 16-1/2 inches between centers; 5-1/2 inch swing over bed; E-Z Glide crank; tool mount & carbide tipped cutting tool; exclusive high efficiency dust collection manifold. Model 260 - all of the above *PLUS* a motorized saddle drive. Model 360 - same as the 260 *PLUS* automatic stop switches on head & tail stocks. Call, write, or Fax for details.

2121 Abell Lane, Sparks, MD 21152 USA
Tel: 1-888-966-3974 or 410-771-4444
Fax: 410-771-4879
e-mail: woodwrite@worldnet.att.net
www.WoodWriteLtd.com

Wood*Write* Ltd.

Circle No. 2098

---

www.woodcraft.com

Get with the click.

Circle No. 955

ARTS & CRAFTS STYLE CHAIR & FOOTSTOOL

Introducing the finest plan on the market today! Pages of directions and 36 by 48 CAD generated plan. This comfortable chair has a 4 position back. Dim. - 34 inches wide by 40 inches high by 39 inches deep

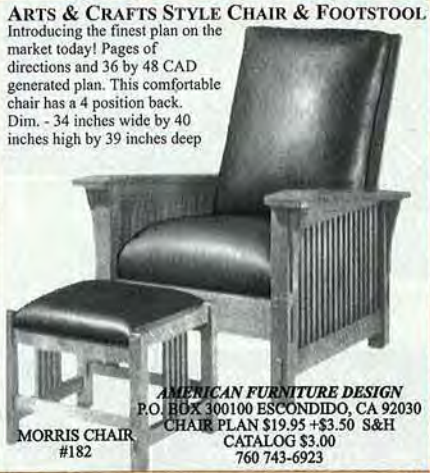

MORRIS CHAIR #182

AMERICAN FURNITURE DESIGN
P.O. BOX 300100 ESCONDIDO, CA 92030
CHAIR PLAN $19.95 +$3.50 S&H
CATALOG $3.00
760 743-6923

Circle No. 314

AMAZING
SCROLLSAW FRETWORK PATTERNS
Easy to advanced designs

Clocks
Photo frames
Jewelry boxes
Candle holders
Furniture
Clock movements
Plywood

Silhouettes on
Christmas
Religion
Farming
Western
Transportation
Nature
& more.
Saw blades
Books

1-800-470-9090

Wildwood Designs
P.O. Box 676-Wood
Richland Center
WI 53581

FREE catalog

G·R·E·E·T·I·N·G·S

Circle No. 475

FROM LOG TO LUMBER
with the ***Alaskan Saw Mill*** attachment
(available in 24", 30", 48" and 56" sizes)

As seen in June 97 issue of Wood Magazine

CUT LUMBER ON SITE WITH THE **ALASKAN MKIII:** BEAMS, BOARDS, SIDING AND CUSTOM CUTS.

RIPPING CHAIN AND OILER KITS ALSO AVAILABLE

GRANBERG INTERNATIONAL
PO BOX 425 RICHMOND, CA. 94807-70425
PHONE 510.237.2099
OUTSIDE CA. 800.233.6499
FAX 510.237.1667
E-MAIL granberg@aol.com
http://www.granberg.com

Circle No. 52

WOODCRAFTERS
OF OKLAHOMA

FREE CATALOG!

LARGEST & BEST SELECTION ANYWHERE:
TURNING TOOLS & SUPPLIES
PENS & PENCILS • PEN BLANKS
TURNING BLOCKS & SQUARES

116 S.E. 74th • Oklahoma City, OK 73149
TOLL FREE: 888-333-7513

Circle No. 2195

Add that **Distinctive Look** to your woodworking projects. Quality handcrafted yet reasonably priced panels. Many finishes & designs. Do it-yourself materials & kits, too! Large colorful catalog $5.00/ catalog with 12 pc. sample pack $19.95 ppd.

MasterCard/Visa accepted.

pierced tin

Country Accents®, P O Box 437, Dept. WD-98, Montoursville, PA 17754 • Ph. 717-478-4127 • M-F 9-5

Circle No. 1910

WIRELESS DRIVEWAY ALARM

A bell rings in your house anytime someone walks or drives into your place.

- Free Literature -

A complete line of wireless security equipment.

DAKOTA ALERT, INC.

BOX 130, ELK POINT, SD 57025

Ph: 605-356-2772

Circle No. 1914

GUARANTEED LOWEST PRICES

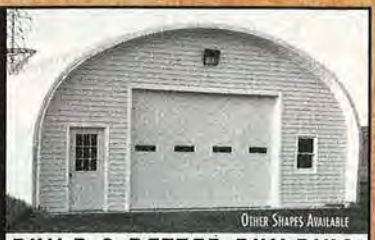

OTHER SHAPES AVAILABLE

BUILD A BETTER BUILDING

- Easy to Assemble
- Quick Delivery
- Built to Last
- Straight Sides
- Trussless
- All Steel
- 20 Year Guarantee

HUGE SAVINGS

FACTORY DIRECT

1-800-668-5422

Sizes 500-20,000 sq. ft.

Strongest for Wind & Snow

Heavy 22, 20 & 18 ga. steel

Maintenance Free

SALE PRICE

FOR EXAMPLE-25' X 40'

$3,844

FRONT ENDWALL NOT INCLUDED

PIONEER STEEL BUILDINGS http://www.pioneersteel.com

Circle No. 1986

WOOD TOY

- ★ Patterns
- ★ Parts
- ★ Wheels
- ★ Many New Patterns to Choose from.
- ★ Executive toys

SEND $1.00 FOR NEW CATALOG

toys and joys

Box 628 w Lynden, Wash. 98264

Circle No. 465

ONE-MAN SAWMILL
Turns Your Timber Into CASH!

30-Day Free Trial!

Call NOW for FREE FACTS!

1-800-942-4406 ext. SW55

TIMBERKING, INC. Dept. SW55
1431 N. TOPPING, KANSAS CITY, MO 64120

FAIRWAYS INC.
— ANY SIZE —

STEEL • ALUMINUM • WOOD
BRASS • STAINLESS

Shipped in a Complete Unit or Kit
$425 & Up

Free Brochures

TOLL FREE

(1-800-231-0793)

The Cutting Edge
Turner's & Carver's Supply

Lathes by **JET, CarbaTec, & Sherline**
Henry Taylor Turning/Carving Tools
• Power Carving & Wood Burning •
Sorby, Stewart, Glaser Turning Tools
ONEWAY 2436 Lathes, Bowl Chucks, Live Centers, Grinding Jigs
Project Supplies • Books • Videos

Call for Free Catalog

The CUTTING EDGE
A Woodworker's Tool & Supply

7123 SouthWest Fwy
Houston TX 77074
713/ 981-9228
fax 713/ 981-6104

www.cuttingedgetools.com

Circle No. 2180

CONSTANTINE
WOODWORKER'S CATALOG

Over 5000 products to
BUILD, REPAIR, RESTORE, REFINISH
anything made of wood!

104 pages jam-packed with fine woods, veneers, tools, finishing supplies and more – shipped fast and fully guaranteed, at discounts of **5% to 15%** on orders of $50 or more!

CONSTANTINE
Serving Woodworkers for 186 years
Dept. 35812 2050 Eastchester Rd., Bronx NY 10461
CALL TOLL FREE **1-800-223-8087**

Circle No. 820

Heavy Glass Table Tops

FACTORY DIRECT DISCOUNT PRICING

- Table Tops
- Shelves
- Doors
- Display Cases
- Entertainment Centers
- Tempered Glass

TABLE TOPS BY PHONE
SATISFACTION GUARANTEED!

WGB GLASS ■ SHAPES ■ THICKNESSES ■ EDGE DESIGNS

FOR FREE IDEA CATALOG AND PRICE LIST SEND POST CARD TO:
WGB GLASS 19785 W. 12 MILE RD., STE. 357 SOUTHFIELD, MI 48076
TO PLACE ORDERS: CALL 1-800-288-6854

Circle No. 2079

YOUR SHOP SOLUTION SOURCE

You've invested a lot in your workshop
Now get the most out of your equipment.

- Mobile Bases
- Outfeed Rollers
- Sawing Centers
- Planing Centers
- Saw Guards
- Pedestal Rollers
- Roller Tables
- Tool Tables
- Tool Pedestals
- Mitre Saw Stands
- Drill Press Support
- Spindle Sanders
- Router Accessories
- Machine Covers

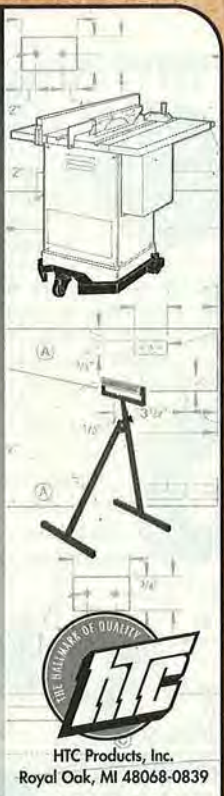

HTC Products, Inc.
Royal Oak, MI 48068-0839

Call for a **FREE** Shop Solutions Catalog.
1-800-624-2027

Circle No. 1245

Full Size Holiday Plans Free Catalog With Order

Deer Plan # 538 **Angel Plan # 544**
Easy to make with 3/8" plywood and sabre saw. Full size plans. Both approx. 47" tall.
Price $11.75 each or buy both for $19.00
Charge orders call 1-800-292-8296
Armor Box 445 E.Northport NY 11731

Circle No. 315

Build "Merrilegs" **Full-size Plan #121 $18.50** (catalog free with order)

CATALOG 200 full-size professional furniture plans – $3.00

SEND TODAY!

Fine Furniture Plans Since 1968
FURNITURE DESIGNS, INC., Dept. BX-128
1827 Elmdale Ave., Glenview, IL 60025
1-800-657-7692

Circle No. 345

THE STANDARD IN SANDERS

The smooth way to tackle virtually any sanding job.

- Your solution for contour sanding
- Benchtop & full size professional models
- Quick-change drums
- Large table surface
- Built-in dust port
- Premium Baldor induction motor
- Made in U.S.A.

Call for a **FREE** Shop Solutions Catalog.
1-800-971-5050
Clayton Machine Corp.
Royal Oak, MI 48068-0520

Circle No. 18

Anderson ™
BEDROOM ORGANIZER

PUT A DRESSER UNDER ANY BED

Increase drawer storage with this beautiful, top quality, solid wood, dust proof, underbed dresser. Fits under any mattress. Shipped UPS
ORDER 48 PAGE CATALOG **621**

1-800-782-4825

Circle No. 1795

FREE
Clockmaking Catalog

Handcrafted Clocks Make Treasured Christmas Gifts!

Klockit, your complete source for clockmaking and craft supplies, has a Christmas gift idea for everyone on your list. Our fall catalog is filled with a large selection of clock components, accessories, kits, and plans for woodworkers of every skill level.

A handcrafted gift comes from the heart!

FREE CATALOG
1-800-556-2548

KLOCKIT® Dept. WD128
P.O. Box 636, Lake Geneva, WI 53147
http://www.klockit.com

Circle No. 2335

Woodworking on the World Wide Web

Better Homes and Gardens®
WOOD ONLINE™

A WOODWORKING INFORMATION SERVICE FROM THE EDITORS OF WOOD® MAGAZINE

http://www.woodmagazine.com

400,000RPM Air/CO2 Hand Inlay, Engraving & Fine Relief Carving.
simple as tracing lines

TURBO CARVER

ULTRA SPEED PRODUCTS, INC.
18500 E. ASCHOFF, ZIGZAG OR 97049
Toll free 877-887-2648 FAX 503-622-3252
www.turbocarver.com

$171(delivered) includes handpiece, foot control, air filter, video, 2 burs, lubrication system, stencil sample, operators manual and bur catalog.
Video is available for a refundable $14 + $3 S&H

Circle No. 2185

www.supergrit.com

Supergrit® SANDPAPER

HOOK & LOOP

4½"	8 Hole	$12.00/50
5"	5 or 8 Hole	$12.50/50
6"	6 or 16 Hole	$16.00/50
5"	Solid "E"	$15.00/50
6"	Blue Zirc	$25.00/50
12"	Solid Red Resin	$12.00/6

BELTS—A.O. RESIN

1 x 30	$.75	4 x 24	$1.10
1 x 42	$.75	4 x 36	$1.40
3 x 21	$.85	6 x 48	$3.50
3 x 24	$.90	6 x 89	$6.20

SHEETS—9" x 11", A.O.

60D, 80D	$14/50
100C	$24/100
120C, 150C	$23/100
180A, 220A	$19/100

3M 4" Diam. Paint & Rust Stripper
Reg. $7.50 ea.
Sale $4.50 ea.
2+ $4.00 ea.

DRUM SANDER ABRASIVE ROLLS
Hook & Loop
Cloth/Paper
Width 1" to 6"

SAND-O-FLEX $20.00

Refills $6.50 ea./2+

PC PROFILE SANDER SUPPLIES

H&L Diamonds $15.00/50
2½" x 5 yd. P.S.A. Rolls $4.75 ea./2+

GOLD MIRKA® PSA DISCS
WHITE A.O. RESIN
RHYNO® DISCS as low as $16.00/100

Grits 60–320

MasterCard VISA

RED HILL CORP.
P.O. BOX 4234
GETTYSBURG, PA 17325

FREE 48 PAGE CATALOG & Incredible close-out sheets.
800-822-4003

Circle No. 1267

Quality
MECHANISMS
For Making
WOODEN BARREL

- Pens
- Pencils
- Roller Balls
- Fountain Pens

plus other related items.

Wholesale/Retail

Call or Write:
The BereaHardWoods Co.
6367 Eastland Rd. Brookpark, Ohio 44142
216-234-7949 *Master Card/Visa*

Circle No. 510

SQUARE DRIVE SCREWS

Simply the Best

Square Drive Beats Driver Slippage
Deep Thread for Super Grip
Hardened Steel for Superior Strength
Made in the US or Canada!

Send $5 for Samples, Catalog, & $5 Off Coupon

McFEELY'S SQUARE DRIVE SCREWS
PO Box 11169 • Dept WD
Lynchburg • VA • 24506-1169
Call Toll Free: 1-800-443-7937

Circle No. 2450

FUTURE STEEL
FACTORY-DIRECT WHOLESALE PRICES!!

Many Models & Sizes Available
Ideal Multi-Purpose Structures
All-Steel 100% Clear-Span Interior

Easy Self-Assembly for the "Do-it-Yourselfer"

1-800-668-5111 ext.1333

Circle No. 1945

THE WOODTURNERS CATALOG

Features:
Woodfast Lathes
Vicmarc Mini Lathes
Artisan™ Pen and Project Kits
Henry Taylor Tools
McNaughton System
Dale Nish Workshops and much more....

Craft Supplies USA is the **Number One** source for the finest woodturning supplies, tools, and workshops with unsurpassed prices and service.

CALL TOLL FREE 1-800-551-8876 TO ORDER
a **FREE** 88-page color copy of The Woodturners Catalog

CRAFT SUPPLIES USA 1287 EAST 1120 SOUTH PROVO, UT 84606

Circle No. 830

FREE TOOL CATALOG!

Your Best Work Starts With Us!

With over 7,000 of the finest woodworking tools in the world, Woodcraft can help you work more efficiently and skillfully than ever.
Call for your Free copy today.

1-800-542-9115
WOODCRAFT®
Helping You Make Wood Work®
www.woodcraft.com
210 Wood County Industrial Park Dept. 98WI12S
PO Box 1686, Parkersburg, WV 26102-1686

Circle No. 355

WOOD MOISTURE METERS

- For the Woodworker -
Moisture problems such as shrinking or warping can ruin the best piece ever built. Measure the moisture with a moisture meter to be sure the wood is dry. Call for new color brochure.
- Lignomat USA -
Po Box 30145
Portland, OR
97294 -- USA

Lignomat :: 800-227-2105

Circle No. 1250

HARDWOODS
Over 100 Quality Hardwoods from Around the World
LUMBER • VENEER • TURNING STOCK

• Timbers from Protected Forests •
• Quantity Discounts •
• Prompt Shipping Arranged Worldwide •
• Custom Milling–Lumber Cut to Size •
• All Inquiries Welcome •
Call or Write for a Free Catalog
• Satisfaction Guaranteed •

Visit us on the World Wide Web
www.woodworkerssource.com
for Specials, Current Prices and Complete Wood Descriptions
e-mail:wood@woodworkerssource.com

1-800-423-2450
WOODWORKERS *Source*
5402 S. 40th St. • Phoenix, AZ 85040

Circle No. 598, 2090

BUCKBOARD BENCH KIT & BUCKBOARD WAGON KIT

40" X 22"

42" X 22"

BENCH KIT includes authentically designed steel springs, steel arms & backrails. **$49.00** (Oak cut to size & drilled **$70.00 additional)**

WAGON KIT includes 5th wheel hitch, steel axles, bolster brace & angle braces. Also includes springs for miniature buckboard bench. **$49.00** (High impact rubber tread wheels **$30.00 additional**).

Both kits include complete hardware, full size plans with detailed instruction. Quantity discounts available.

The Roudebush Company
PO Box 348A, Star City, IN 46985
800-847-4947
Visa, MC accepted. Price includes shipping UPS

Circle No. 1085

Quality and Value You Haven't Seen In Years

Blueprint for Wood Case Included

- Brass clock kit Movement
- No plastic parts
- No parts stamped out
- All parts 100% machined
- Assemble with simple hand tools
- Call (406) 563-2498 for brochure

The Clock Shop
311 Cottonwood St. Anaconda, MT 59711
Kit: $349 + $15 Handling

Circle No. 2325

Sheer inspiration for holiday projects!

Better Homes and Gardens
Holiday Decorations
& Gifts
More Than 50 Great Projects
★ Festive ornaments and centerpieces
★ Breathtaking wreaths
★ Easy-to-make gifts
Full-Size Patterns!
ALL NEW from the editors of WOOD® Magazine!
Plus! Holiday Lights ★ Nutcrackers Baby-Boomers' Toys
From the Editors of WOOD® magazine

- Outdoors — lawn ornaments, lighting, door decorations!
- Indoors — tree trims, table decorations, gifts!
- Easy, step-by-step instructions!
- Cutting diagrams and materials lists!
- Full-size project patterns!
- 112 colorful, idea-packed pages!

At your newsstand October 6

Call toll free:

1-800-572-9350

Or, send $5.95 (plus $2 shipping and handling; applicable taxes included) to: WOOD® Holiday Decorations and Gifts, Dept. 4ZQA, P.O. Box 9255, Des Moines, IA 50306.

#980536

Trips to the lumber yard will never be the same with the...

PACE EDWARDS

ROLL-TOP-COVER™

This durable hard tonneau cover gives your truck added security with style and retracts in seconds to give you full use of your truck bed whenever additional space is needed.

Roll-Top...We've got you Covered!

www.pace-edwards.com

for more information call toll free 1 888 ROLL-TOP

Circle No. 1985

Design Breakthrough!

It's the ultimate workbench!
It's a downdraft table!
It's a complete air filtration system!

- *360˚ Air Collection*
- *Unique Filter Lock System*
- *Flourescent Light*
- *1100 CFM*
- *12' Power Cord*
- *Filters to 0.5 Micron*

Overhead Mount
Special Introductory Offer!
Only $599 + S&H

***Deluxe** 30"x69"*

- *Generous Maple Worktops*
- *Powerful 930,1600,or NEW 2850 CFM Motor*
- *GFI Convenience Outlet*
- *All Benches Shown with Optional Accessories*
- *Three Stage Filtering to 0.5 Micron*

***Original** 30"x54"*
Only $1099 + S&H

***Ultra Grand** 33"x95"*

Call now to find out about our Specials on purchases made by May 1st

WOODMARK

P.O. Box 211434•Bedford, TX 76095

Visa
Mastercard
Amex

1-800-845-4400

Free Catalog!

Circle No. 1295

Continued from page 98

Digital protractor conquers complex molding cuts

Getting all the angles right when cutting crown molding challenges even the most experienced finish carpenter. If you don't measure, calculate, and cut precisely, you end up with ill-fitting joints. Well, put away the calculator because Bosch's Digital Protractor has arrived.

As a test, I took an odd corner in my house that always defied me when it came to figuring the bevel and miter cuts for crown molding. With the Bosch Digital Protractor, I measured my molding's spring angle (the angle at which the molding "springs" away from the wall) and the angle of the corner between the walls, pressing the BV/MT (bevel/miter) button after each measurement. Two more pushes of the button, and the correct miter and bevel angles for the cut showed on the protractor's easy-to-read liquid crystal display.

This precision instrument finds angles up to 223° and is accurate to 1/10°—far more accurate than the miter scale on any saw I've ever worked with. You can use the Bosch Digital Protractor to set saw blade and worktable angles, but you'll need to buy the optional leg extension, shown in the photo *below left*. Though it was apparently designed with light construction use in mind, the Bosch Digital Protractor—with the extension—gives you the accuracy you need in the woodshop for complex compound cuts.

—Tested by Bob McFarlin

PRODUCT SCORECARD

Bosch Digital Protractor DWM 40L

Performance	★ ★ ★ ★ ★
Price	$120, extension leg: $12
Value	★ ★ ★ ★ ☆

S-B Power Tool Co., 4300 West Peterson Ave., Chicago, IL 60646. Call 773/286-7330.

SuperGrind 2004

TORMEK SuperGrind

TOP QUALITY MADE IN SWEDEN

The only complete water cooled sharpening system.

*Denotes included as standard with 2004 SuperGrind.

Tormek has created a sharpening system that can grind, sharpen, hone and polish most wood working edge tools to a finish that an old fashioned barber would be proud of.

WOODTURNERS
CABINET MAKERS
WOODCARVERS
JOINERY WORKSHOPS
PROFESSIONAL SHARPENERS

Straight Edge Jig For plane irons, wood chisels and spoke shave blades.

Pro AngleMaster For setting and measuring any edge angle from 15° to 75°. For any stone dia. from Ø10" to Ø6".

Handbook Water cooled grinding and sharpening of edge tools.

Honing Compound For the Leather Honing Wheels.

Stone Truing Tool Trues the stone exactly round and flat.

Multi Jig For turning skew chisels, parting/beading tools, roughing gouges. Straight carving gouges 1" - 2".

Planer/Jointer Blade Jig For HSS blades of any length. Min width ½".

Scissors Jig For all sizes of scissors. Also for shears.

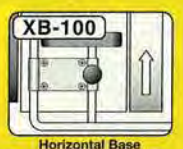

Horizontal Base For grinding away from the edge. Ideal for turners and woodcarvers.

Stone Grader For grading the SuperGrind stone to a finer grit. Also for renewing a glazed stone.

Universal Gouge Jig For fingernail shaped turning gouges. Carving gouges and V tools. Max. width 1".

Knife Jig For most knives. Min. blade length 2¾". Portable electric hand planer blades. Carvers draw knives.

Axe Jig For carving and carpenter's axes. Max. axe head size 6½".

Machine Cover For protecting the machine from wood dust.

Profiled Leather Honing Wheel For inside honing and polishing of gouges and V tools.

Tool Rest with TORLOCK For turning scrapers. Carving scorps and inshaves. Screw drivers.

Long Knife Jig For long and thin knives. Stabilizes a thin blade. Min. blade length 4¾".

Call now for brochure and nearest stockist

United States	TORMEK	1-800-5-TORMEK
Australia	PROMAC	07-3279-4811
New Zealand	W & R JACK	03-546-7479
South Africa	RECORD	011-422-2340
Canada	TORMEK	1-800-5-TORMEK
United Kingdom	BRIMARC	01926 493389

FORREST'S BUY ONE & SAVE - BUY MORE & SAVE MORE SALE

THRU 1/30/99

Buy any sawblade or dado in this ad and save 10% off the sale price! Buy additional sawblade(s) or dado(s) and save even more! 15%-20%!

EVES. & WEEKENDS LEAVE MESSAGE

Call Forrest now for details — (800) 733-7111 or (973) 473-5236

NEW WEEKDAY HOURS 9 AM - 6PM EST

EXCLUSIVE! FREE OFFER

$23 Value!

144 pages full of photos! Checklists to help you keep every power tool in your shop working perfectly. A find-it-fast trouble-shooting chart tells you how to identify and fix problems. Easy-to-follow photo sequences show you how to get exact alignment every time.

Published by Popular Woodworking Author – Sal Maccarone

OR 300 Great Shop Tips or Forrest Logo cap FREE with any saw blade or Dado listed & purchased from this ad. You must mention you saw this offer in WOOD® Magazine, when ordering.

Offer Expires Jan. 30, 1999. One book per order.
ORDER NOW SUPPLIES ARE LIMITED.

FREE shipping only on New blades/dado items thru 1/30/99

FREE $45 in sharpening coupons with each order placed by 1/30/99

Mention Wood® Magazine to receive discount and free coupons and free shipping
Coupons valid thru 12/31/2000 and good on all makes of carbide blade and dado set sharpening.

WOODWORKER II— 6" – 7 1/4" – 14"

With this one ALL PURPOSE blade you can RIP & CROSSCUT 1"–2" ROCKHARDS and SOFTWOODS resulting in a **SMOOTH AS SANDED** surface. PLY-VENEERS of OAK and BIRCH will crosscut with NO BOTTOM SPLINTER at moderate feed rates.

- DOUBLE HARD and 40% STRONGER C-4 CARBIDE
- Ends blade changing
- Ends scratchy saw cuts
- Ends second-step finishing
- Ends cutting 1/16" oversize to allow for RESURFACING
- **BUY AND SHARPEN 1 BLADE INSTEAD OF 3**

5/8" holes, boring thru 1-1/4" add $7.50. Larger at Time Basis —Shipping $4.50

WOODWORKER II	LIST	SALE	10%	20%
14"X40TX1"	$215	$149	$134	$119
14"X30TX1"	$195	$139	$125	$111
12"X40TX1"	$183	$129	$116	$103
12"X30TX1"	$162	$119	$107	$ 95
10"X40TX1/8" or 3/32"	$156	$119	$107	$ 95
30T 1/8" or 3/32"	$135	$ 99	$ 89	$ 79
9"X40T	$146	$109	$ 98	$ 87
30T	$125	$ 99	$ 89	$ 79
*8-1/4"X40TX 3/32"	$136	$ 99	$ 89	$ 79
8"X40T 3/32"	$136	$ 99	$ 89	$ 79
30T	$115	$ 89	$ 80	$ 71
7-1/4"X30T 3/32"	$112	$ 69	$ 62	$ 55
**6"x40T 3/32"	$136	$ 89	$ 80	$ 71

*NEW for Sears & Makita Table Saws **New For Saw Boss

In Stock Blades made for Special Uses:
- Gang Saws • Panel & Scorer • Picture Frames (Miter-Master)
- Solid Surface • Thin Rim • Plastic/Acrylic (No-Melt)

Also made to order Blades available within 3 weeks, at competitive prices!

CHOPMASTER FOR SLIDING COMPOUNDS & MITER SAWS

New specs, 5° Neg. Pts. & flat, runs out less than .002 for perfect, tight, smooth, splinter-free miter joints.

TAKE EXTRA 10% – 20% OFF COMBO SALE!

NEW SIZES AVAILABLE	LIST	SALE
Delta Sidekick 6-1/2"x40Tx5/8"	$149	$ 89
Sears 8-1/4" & Delta 8-1/4"x60Tx5/8"	$170	$ 99
Hitachi 8-1/2"x60Tx5/8"	$179	$109
DeWalt 8-1/2" & Ryobi 8-1/2"x60Tx5/8"	$179	$109
Delta 9"x80Tx5/8"	$204	$119
Ryobi–Makita & all 10"x80Tx5/8"	$207	$129
DeWalt, Makita, B&D, Hitachi 12"x80Tx1"	$229	$139
Ryobi–Makita 14"x100Tx1"	$266	$179
Hitachi 15"x100Tx1"	$277	$189

For good general purpose cuts use Woodworker II 30T & 40T or Woodworker I. Use small stiffener where possible.

THE ONE BLADE THAT LEAVES A SMOOTH-AS-SANDED SURFACE!

SAVE ANOTHER **$45 to $90** AFTER USING 9 – $5.00 SHARPENING COUPONS USE 1 PER BLADE OR DADO

WOODWORKER I – CROSSCUT — 7 1/4" – 14"

For TABLE and RADIAL SAW – 10% to 20%

NON-SPLINTERING PLYS

	LIST	SALE
14"x60Tx1"	$224	$159
12"x60Tx1" or 5/8" 1/8"K	$198	$139
10"x60Tx5/8" 3/32"K	$162	$129
8-1/4"X60T	$150	$109
8"X60T	$150	$109
7-1/4"X60T	$150	$109

OTHER SIZES AVAILABLE – 7 1/4" – 14"

DURALINE HI-A/T FOR TABLE & RADIAL SAWS

PORTABLE & PANEL SAWS

5/8" HOLES. Boring up to 1-1/4" $7.50 extra. Larger holes–time basis. Shipping $4.50.

TAKE 10% TO 20% MORE OFF THESE PRICES

Faster feed rates & absolute splinter control. Stops splintering on OAK/BIRCH PLY VENEERS & MELAMINE

SIZES AVAILABLE	LIST	SALE
7-1/4" x 60T x 3/32" K	$149	$129
8" x 80T x 1/8" & 3/32" K	$202	$169
220mm x 80T x 1/8" x 30mm	---	$167
9" x 80T x 1/8" & 3/32" K	$207	$179
10" x 80T x 1/8" & 3/32" K	$207	$159
12" x 80T x 1-1/8"K	$212	$181

SIZES AVAILABLE	LIST	SALE
300mm x 100T x 1/8" x 30mm	---	$197
12" x 100T x 1-1/8"K	$253	$215
14" x 80T x 1"	$232	$197
14" x 100T x 1"	$266	$226
16" x 80T x 1"	$262	$223
16" x 100T x 1"	$294	$243

Above is bore standard.

SPECIAL COMBO SALE EXTRA 10%-20% OFF

CARBIDE IS THE HARDEST OF THE C-4 GRADES AND 40% STRONGER, NOT WEAKER!

FOR 50% TO 300% LONGER LIFE.

Standard C-2 Carbide (below, left) and FORREST **still sharp** Oxidation and Corrosion Resistant Sub-Micron C-4 Carbide (below, right). Each shown after cutting 3,500 feet of MDF. Similar results obtained cutting particle board, melamine, and plywood.

STILL SHARP AFTER 3,500 FEET OF CUTTING!

$21 VALUE — ***FREE* 10" ORANGE PLASTIC BLADE RUNNER–CARRIER!** SHIPPED WITH 6", 8" & 10" DADO SETS. HOLDS UP TO 10 BLADES, 5 PER SIDE ON CENTER BOLT OR DADOS.

DELUXE DADO-KING!

AS LOW AS $184 NET AFTER USING SHARPENING COUPONS

WORLD'S NO. 1 DADO - NO CHIP ON PLYS & MELAMINE

C-4 Carbide Tips — 4 on each chipper with special negative face hooks. Shims & 3/32" Chipper. Cuts 1/8" to 29/32" wide!!

	LIST	SALE	10%	15%
6" D. 5/8" Bore NEW	$299	$269	$242	$229
8" D. 5/8" Bore	$321	$289	$260	$245
10" D. 5/8" & 1" Bore	$389	$349	$314	$297
12" D. 1" Bore	$499	$449	$404	$382

(Bore up to 1-1/4" Add $25 — Plus $5.50 S&H)

CUTTING PROBLEMS?

Call the factory for *FREE* technical help!!

1-800-733-7111

973-473-5236

FLASH NEWS!!

OUR $79 - $89 30T & 40T OUTPERFORMED (E-EXCELLENT) 23 other 40T & 50T premium blades both foreign & domestic on Ply, Melamine, MDF and Oak/Rip!

Editors' Choice and Top Rating over 18 competing combo saw blades!
"The 10"x40T earns our Editors' Choice award for the best performance, regardless of price. The 10"x40T produced super-smooth ripped edges in ¾ in. pine and oak, with absolutely no saw marks visible to the eye...we also got excellent crosscuts, surpassed only by an 80-tooth dedicated crosscut blade."
See *American Woodworker* April 1998, pp. 64-69.

BLADE DAMPENERS-STIFFENERS

FOR BETTER CUTS on all brands of blades, use our large 1/8" DAMPENERS-STIFFENERS against one side.

4"	..... $21
5"	..... $24
6"	..... $25

7" AND LARGER AVAILABLE

REDUCES NOISE 50%–75%

WE RECOMMEND OUR FACTORY SHARPENING as some local sharpening creates problems with **MICRO-CHIPPED EDGES** reducing blade life & cutting quality.
2-4 DAYS ON THESE AND ALL MAKES OF FLAT FACE & CONCAVE CARBIDE TIP SAWS. Ship via UPS. Typical 10x40T $17.00, 60T $19.00. Add return UPS $5.00, $1.00 each additional blade.

FOR SPECIAL PRICE COUPONS MENTION *WOOD*® MAGAZINE.

PHONE TOLL FREE! 1 (800) 733-7111
(In NJ: 973-473-5236) FAX: 973-471-3333

Fine American saw making & sharpening since 1946.

DEALER INQUIRIES WELCOME

CANADA SALES:
CMR RON COLLIER
3644 SCHUMANN RD.
BAY CITY, MI 48706
800-229-4814
517-684-0402 FAX

Quality is why we're different!

FORREST

WESTERN CANADA: CALL EUROPEAN SHARPENING 403-287-0850 403-287-1622 FAX

BUSINESS OPEN ACCOUNTS AVAILABLE

VISA MasterCard DISCOVER

FL, NJ, NY Residents Please Add Sales Tax
Shipping Charges with book:
Sawblades $9; Dado $10; Stiffener $2
SATISFACTION GUARANTEED OR FULL CASH REFUND.

(800) 733-7111 or (973) 473-5236

FORREST MANUFACTURING COMPANY, INC. • 457 RIVER ROAD, CLIFTON, NJ 07014 • FAX (973) 471-3333

FIND CENTER FAST
SIMPLE • ACCURATE • GUARANTEED
CenterPoint™ measuring tools have all standard markings, plus the new center-finding scale. Made in the USA.
Available from CenterPoint™
• Construction Grade™ tape measures
• Stainless steel flat rules
• 12 foot adhesive-back Bench Tapes™
800.540.6604
HOW IT WORKS
FIRST MEASURE THE DISTANCE
THEN FIND THE SAME NUMBER HERE– THAT'S THE CENTER
1998 WOOD MAGAZINE EDITORS' CHOICE
BAKLUND-HELLAR, INC. • RT 1 BOX 623 • EASTSOUND WA 98245 • www.center-point.com
Circle No. 103

Woodshop Solutions.
FACTORY SAVINGS UP TO 60%
100% USEABLE SPACE!
Now is the time to build the workshop of your dreams. Get the protection and work space you need with an affordable SteelMaster Building – the strongest, most flexible clearspan protective shelter money can buy. Expertly crafted and easily assembled for years of maintenance-free enjoyment.
HUGE FACTORY DISCOUNTS GOING ON NOW!
STEEL BUILDINGS
FREE SUBSCRIPTION
9 FREE ISSUES
of BETTER HOMES & GARDENS WOOD®
with your purchase.
• FREE Storage
• Immediate Delivery
• 100% financing available
• Heavy Wind & Snow Loads
• FREE State Certified Blueprints
• Superb Quality - 20 Year Guarantee
• Easy do-it-yourself construction
RESIDENTIAL & COMMERCIAL USE
SAVE ON SELECT SIZES
25x24 • 30x46
40x56 • 50x116
STEELMASTER.
Call Toll Free: 1-800-888-4606
for a FREE COLOR CATALOGUE
Circle No. 2030

Statement of Ownership, Management, and Circulation (Required by 39 USC 3685) 1. Publication Title: Better Homes and Gardens® *WOOD*® Magazine. 2. Publication No. 724-890. 3. Filing Date: October 1, 1998. 4. Issue Frequency: Nine times per year in January, February, March, April, June, August, October, November, and December. 5. No. of Issues Published Annually: 9. 6. Annual Subscription Price $27. 7. Complete Mailing Address of Known Office of Publication: 1716 Locust Street, Des Moines, Polk County, IA 50309-3023. 8. Complete Mailing Address of Headquarters or General Business Office of Publisher: 1716 Locust Street, Des Moines, Polk County, IA 50309-3023. 9. Full Names and Complete Mailing Addresses of Publisher, Editor, and Managing Editor: Publisher: William R. Reed, 1912 Grand Ave., Des Moines, IA 50309-3379; Editor-In-Chief: Larry Clayton, 1912 Grand Ave., Des Moines, IA 50309-3379; Managing Editor: James V. Harrold, 1912 Grand Ave., Des Moines, IA 50309-3379. 10. Owner: Meredith Corporation, 1716 Locust Street, Des Moines, IA 50309-3023. The Names and Addresses of Stockholders Owning or Holding 1 Percent or More of the Total Amount of Stock: Bank of New York (The), 925 Patterson Plank Road, Secaucus, NJ 07094; Bankers Trust Co., c/o BT Services Tennessee Inc., Pension Trust Services, 648 Grassmere Park Drive, Nashville, TN 37211; BZW Barclays Global Investors, N.A., 45 Fremont St., 18th Floor, San Francisco, CA 94105; Boston Safe Deposit & Trust Co., c/o Mellon Bank N.A., Three Mellon Bank Center, Room 153-3015, Pittsburgh, PA 15259; Chase Manhattan Bank, Two Chase Manhattan Plaza, 5th Floor, New York, NY 10081; Citicorp Services, Inc., P.O. Box 30576, Tampa, FL 33630-3576; Lewco Securities Corp., 34 Exchange Pl. Plaza, 4th Floor, Jersey City, NJ 07311-3988; Merrill Lynch, Pierce, Fenner & Smith Safekeeping, 4 Corporate Place, Corporate Park 287, 2nd Floor, Piscataway, NJ 08855; Northern Trust Company, 801 S. Canal C-In, Chicago, IL 60607; Norwest Bank Minnesota National Association, 733 Marquette Avenue, Minneapolis, MN 55479-0056; PNC National Association, 1835 Market St,, 11 Penn Center, 15th Floor, Philadelphia, PA 19103; SSB Custodian, Global Proxy Unit, A5NW, P.O. Box 1631, Boston, MA 02105-1631.

Through some of the nominees listed above, the E. T. Meredith and Bohen families and family foundations own directly or beneficially, approximately 25% of the issued and outstanding stock of the corporation. Each nominee listed above holds stock for one or more stockholders. 11. Known Bondholders, Mortgagees, and Other Security Holders Owning or Holding 1 Percent or More of Total Amount of Bonds, Mortgages, or Other Securities: None. Item 12 of PS Form 3526 not applicable. 13. Publication Title: Better Homes and Gardens® *WOOD*® Magazine. 14. Issue Date for Circulation Data: June 1998. 15. Extent and Nature of Circulation: A. Total No. Copies (Net Press Run): Average No. Copies Each Issue During Preceding 12 Months, 786,007; Actual No. Copies of Single Issue Published Nearest to Filing Date, 802,006. B. Paid and/or Requested Circulation: 1. Sales Through Dealers and Carriers, Street Vendors, and Counter Sales (Not Mailed): Average No. Copies Each Issue During Preceding 12 Months, 61,556; Actual No. Copies of Single Issue Published Nearest to Filing Date, 62,000. 2. Paid or Requested Mail Subscriptions (Include advertiser's proof copies/exchange copies): Average No. Copies Each Issue During Preceding 12 Months, 558,210; Actual No. Copies of Single Issue Published Nearest to Filing Date, 557,302. C. Total Paid and/or Requested Circulation (Sum of 15b(1) and 15b(2)): Average No. Copies Each Issue During Preceding 12 Months, 619,766; Actual No. Copies of Single Issue Published Nearest to Filing Date, 619,302. D. Free Distribution by Mail, (Samples, complimentary, and other free): Average No. Copies Each Issue During Preceding 12 Months, 20,220; Actual No. Copies of Single Issue Published Nearest to Filing Date, 30,729. E. Free Distribution Outside the Mail (Carriers or other means): Average Number Copies Each Issue During Preceding 12 Months, 3,021; Actual No. Copies of Single Issue Published Nearest to Filing Date, 3,157. F. Total Free Distribution (Sum of 15d and 15e): Average No. Copies Each Issue During Preceding 12 Months, 23,241; Actual No. Copies of Single Issue Published Nearest to Filing Date, 33,886. G. Total Distribution (Sum of 15c and 15f): Average No. Copies Each Issue During Preceding 12 Months, 643,007; Actual No. Copies of Single Issue Published Nearest to Filing Date, 653,188. H. Copies Not Distributed: (1) Office Use, Leftovers, Spoiled: Average No. Copies Each Issue During Preceding 12 Months, 1,778; Actual No. Copies of Single Issue Published Nearest to Filing Date, 818. (2) Returns from News Agents: Average No. Copies Each Issue During Preceding 12 Months, 141,222; Actual No. Copies of Single Issue Published Nearest to Filing Date, 148,000. I. Total (Sum of 15g, 15h(1), 15h(2)). Average No. Copies Each Issue During Preceding 12 Months, 786,007; Actual No. Copies of Single Issue Published Nearest to Filing Date, 802,006. Percent Paid and/or Requested Circulation (15c/15g×100). Average No. Copies Each Issue During Preceding 12 Months, 96.39%; Actual No. Copies of Single Issue Published Nearest to Filing Date, 94.81%. 16. Publication of Statement of Ownership will be printed in the December 1998 issue of this publication. 17. Signature and Title of Editor, Publisher, Business Manager, or Owner: (Signed) William R. Reed, Publisher. Date: August 24, 1998. I certify that all information furnished on this form is true and complete. I understand that anyone who furnishes false or misleading information on this form or who omits material or information requested on the form may be subject to criminal sanctions (including fines and imprisonment) and/or civil sanctions (including multiple damages and civil penalties).

GIFT CERTIFICATES AVAILABLE - QUANTITIES LIMITED - NOT RESPONSIBLE FOR TYPOGRAPHICAL ERRORS - PRICES SUBJECT TO CHANGE WITHOUT NOTICE

VISIT OUR WEB SITE AT HTTP://WWW.INTERNATIONALTOOL.COM

INTERNATIONAL TOOL CORPORATION

"The Power Tool Specialists"

Circle No. 49

WE ACCEPT VISA, MASTERCARD, DISCOVER, & AMERICAN EXPRESS

2590 Davie Rd., Davie Florida 33317

BUSINESS HOURS: MON-FRI 8-5 PM SATURDAY: 9-12 EST

ALL CHECKS WILL BE HELD 10 BUSINESS DAYS

PORTER-CABLE

BN125	18 ga. bradnailer kit 5/8" - 1 1/4"	88
BN200	18 ga. brad nailer kit 3/4" - 2"	134
CDA250	bammer cdls 15 ga 2 1/2" fin nailer	277
CF1400	1 hp pancake compressor	194
CF15401	1/2 hp side stack compressor	292
CF24002	hp side stack compressor	318
CFN250	bammer cdls 16 ga 1-2 1/2" fin nailer	277
DA250	15 ga. angle fin nailer kit 1 1/4" - 2 1/2"	199
DA250A	15 ga. ang fin nailer kit 1 1/4" - 2 1/2"	234
FN250A	16 ga. finish nailer kit 3/4" - 2 1/2"	182
FR350	framing nailer w/case 3 1/2" capacity	287
NS100	narrow crown stapler kit 1/2" - 1"	94
NS150	narrow crown stapler kit 1/2" - 1 1/2"	154
NSS150	18 ga 1/4" narrow crwn stapler kit	178
330	speed block finishing sander	67
332	Quiksand 5" rndm orb w/stikit pad	58
333	Quiksand w/hook & loop, dustls	64
333VS	5" var. speed Quiksand ros, dstls	84
340	1/4 sheet finishing sander dstls	54
352VS	3" x 21" belt sander dstls w/var sp	174
360	3" x 24" belt sander w/dust bag	213
360VS	3" x 24" belt sander, vs with bag	228
362	4" x 24" belt sander w/dust bag	222
362VS	4" x 24" vs dustless belt sander	236
505	1/2 sht fin sander	138
5116	omni jig	274
556	bisc joiner w/case & tilt fence	134
557	deluxe plate joiner kit	197
690	1 1/2 hp router	138
691	1 1/2 hp "d" handle router	159
693PK	1 1/2 hp plunge router, fixed base, cs	194
693PKD	693PK w/fixed, plunge & "D" base	242
697	router table with 1 1/2 h p motor	232
698	router table only	134
6931	plunge router base	82
7116	new 24" omnijig	308
7336	6" random orbit var. speed sander	142
7518	3 1/4 hp fixed base router-5 sp	288
7539	3 1/4 hp plunge router-5 speed	289
9444	profile sander kit w/accys & cs	99
9444VS	Var. speed profile sander kit	111
9543	Quik-Change bayonet saw kit	159
9862	12v cordless kit w/2 batteries, case	152
9862F	12v kit w/2 batt, charger & flashlite	159
9872	14.4v crdls drill kit w/2 batt. & case	186
9874	14.4v 1/2" t handle cdls drill kit	199

Panasonic

EYC003	combo 15.6v drill & 12v wood saw w/4 batteries	398
EY6100EQKW	12V cdls drill w/kit 2 batteries, chrgr & case	174
EY6230FQKW	15.6v cordless kit complete w/free job radio, 1/2" chuck	206

PERFORMAX PRODUCTS, INC.

16-32 Plus	16"-32" bench drum sander	899
22-44 Pro	22" pro drum sander	1799

SKIL

HD77	7 1/4" worm drive circular saw	159
HD77M	7 1/4" magnesium worm drive saw	169
HD1605-02	biscuit joiner	134
3400	10" table saw w/carb blade & stand	198

JET EQUIPMENT & TOOLS

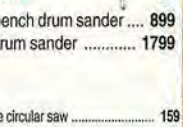

DC-1200W	2 hp white dust collector	399
JJ-6CSXW	6" enclosed stand white jointer	499
JWP-15CSW	15" white enc. stand planer	1199
JWBS-14CSW	14" white enc. bandsaw	569
JTAS-10X650-WI	3 hp white cabinet saw/accys	1399
JWTS-10CWPFX	1 1/2 hp contractors saw w/accys	795
JPM-13	13" planer moulder	795
JWS18H0	1 1/2" hpshaper 1/2" & 3/4"spindls	524
JML-1014	mini lathe	324

BOSCH

1275DVS	3" x 24" vs dustless belt sander	213
1276DVS	4" x 24" vs dustless belt sander	224
1278VSK	compact belt sander kit	128
1295DH	5" random orbit sander	82
1584AVSK	clic barrel handle jig saw, vs w/case	149
1587AVSK-50	50th anniv. jig saw kit	156
1587AVSK	top handle jig saw, var sp w/case	149
1613EVS	2 hp var sp plunge router	199
1615EVS	3 1/4 hp plunge router	298
1617	1 3/4 hp router	158
1617EVS	2 hp electronic var. speed router	179
1618	1 3/4 hp D-handle router	169
3107DVSK	5" random orbit sander with case	114
3294EVS	in line grip jig saw	122
3315K	12v crdls t handle w/2 bat, cs & chrg	158
3615K	14.4v cdls drill kit w/2 batteries	174
3725DVS	5" dustless vs random orbit sander	144
3727DVS	6" dustless vs random orbit sander	148
3915	10" slide compound miter saw	498

BESSEY

		BOX OF 5 (EACH)	PRICE (EACH)
K3.512	12" k body clamp	28.95	30.95
K3.524	24" k body clamp	31.95	34.95
K3.531	31" k body clamp	34.95	36.95
K3.540	40" k body clamp	38.95	41.95

POWERMATIC

13	6" x 89" edge sander	649
14	oscillating spindle sander	295
15	15" planer w/enclosed stand	1189
24	2 hp shaper w/1/2" & 3/4" spindle	1049
44	14" band saw, 1 hp, enclosed stand	645
54	6" jointer w/enclsd stand	495
60	8" long bed jointer	1775
64A	1 1/2 hp tbl saw w/accu fence	745
66	3 hp, 1 ph 10" t.a. saw w/50" fence	1995
66	5 h p, 1 ph 10" t.a. saw w/50" fence	2095
73	1 1/2 hp dust collector	389
75	3 hp dust collector	675
84	combo belt & disc sander	445
412	12 1/2" portable planer	395
471	1 hp dust collector	219

AIRY

EZ2	18 gauge nail/staple kit	109
0249NK	18 gauge brad nailer 3/4"-2" w/case & 5000 nails	108
0232NK	18 ga brad kit 3/8"-1 1/4" with case	68
0566T	angle finish nailer 1"-2 1/2"	202
0626NK	18 gauge narrow crown stapler 3/8"-1 " with case	103
0638S	narrow cr stapler 3/4"-1 1/2"w/cs	179
ITM/ART	0241 & 0626 in one case	119

Purchase any tool & you may add this Porter Cable 8 1/4" circular saw with carbide blade Model 368-1 for only $79.00. Let's see our so-called competitors top this one! HURRY...WHILE QUANTITIES LAST!

Yein

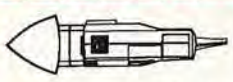

MSXE-636-2	Multimaster triangular sander *includes case, paper asst. & 2 blades*	172
99-55-13	Fein turbo vac II	248
MSFE636-1	Random orbit sander	489

RYOBI

AP12	12" port. planer	345
DBJ50	detail biscuit jointer	68
DC500K	detail carver kit	62
HT20VSK	multi rotary tool w/cs & accys	48
ML618	18" wood mini lathe	199
OSS450	oscillating spindle sander	149
RE185	2 1/4 hp fixed base vs router	109
SC165VS	16" vs scroll saw	164

HITACHI

C7SBK	7 1/4" circ. saw w/case	109
C8FB2	8 1/2" slide compound miter saw	438
C10FC	10" compound miter saw	198
C10FS	10" slide compound miter saw	558
DN10DYK	9.6V cdls right angle kit	168
DS14DV-G	14.4v kit w/2 bat & free Gerber tool	209
M12V	3 hp var speed plunge router	189
NR83A	full head strip nailer, 2 - 3 1/2 cap	369
NV83A	coil nailer, 2" to 3 1/4" capacity	369
P20SB	3 1/4" planer	89

freud

EB100	edge bander	214
FC107	7 pc carbide forstner bit set	89
JS100	biscuit joiner	94
JS102	biscuit joiner w/var. angle fence	118
FT2000E	3 hp plunge router	184
F410	10" x 40t quiet blade	48
F810	10" x 80t quiet blade	73
LM72M010	10" x 24t flat top rip blade	36
LU82M010	10"x 60t crosscut/rip blade	44
LU84R010	10" x 50T red combo blade	42
LU85R010	10" x 80T red crosscut blade	58
LU92M010	10" x 60 teeth TCH laminate	59
LU98M010	10" x 80 teeth TCH lam & wood	67
SD208	8" safety dado	94
SD308	8" safety dado with case	116
SD508	new 8" super dado set	167
SD608	8" dial-a-width dado	198
TK406	10" x 60 teeth thin kerf blade	36
TK806	10" x 80 teeth thin kerf blade	47
TK906	10" x 50 teeth thin kerf blade	34
TR215	8 1/2" compound saw	238

"Jorgensen"

		OUR PRICE EACH	BOX OF 6
STYLE 37 2 1/2" THROAT 1/4" x 3/4"			
3706	6"	6.00	34.50
3712	12"	6.70	38.95
3718	18"	7.50	42.75
3724	24"	8.25	46.50
3730	30"	8.90	50.75
3736	36"	9.95	56.95
PONY CLAMPS	#50, 3/4" 8.20	BOX OF 12	$94.95
	#52, 1/2" 6.95	BOX OF 12	$79.95
PONY SPRING CLAMPS		3201HT 1"	1.35

Makita

5007NBK	7 1/4" circ saw w/cs & blade	128
6095DWE	9.6v cdls drill kit w/2 batt	128
6095DWLE2	same as above w/flashlght	139
6213DWAE	12v cordless kit w/ 2 batteries	169
6233DWAE	14.4v cordless kit w/2 batteries	199
6333DWAE	14.4v 1/2" cordless kit	209
BO5001	5" random orbit sander	67
LS1013	10" slide dual comp miter saw	558
LS1211	12" slide dual comp miter saw	668
N1900B	3 1/4" planer	146

Milwaukee

6490-6	10" miter saw	274
6496-6	*new* 10" slide compound miter saw	545
6497-6	10" slide compound saw w/accs	619
6537-22	10 amp recip saw w/case	178

SENCO

SKS	narrow crown stapler	247
SLP20	brad nailer w/cse 5/8"-1 5/8" cap	198
SFN40	finish nailer 1 1/4"-2 1/2" cap	338

DELTA

11-990	12" drill press	188
14-650	hollow chisel mortiser	238
22-560	*new* 12" portable planer	378
23-710	*new* sharpening center	149
28-185	bench top band saw	167
28-270	14" bandsaw, 1 hp white, enc stand	849
31-780W	b.o.s.s. osc. sander w/spindles	216
36-865	versa feeder stock feeder	248
36-920	Grand Edition 3 hp unisaw after rebate	1599
37-190	6" jointer w/stand after rebate	369
40-540	16" vs scroll saw	162
40-650	Q-3 scroll saw	429
43-505	router/shaper	299
50-840	1 hp dust collector, 650 cfm	219
50-850	1 1/2 hp dust collector, 1200cfm	289
50-860	room air cleaner, 850 cfm	234

DEWALT

DW100	3/8" drill, 0-2500 rpm, w/chuck key	62
DW4PAK	18v kit circ saw, recip saw, hammr drill and light	559
DW309K	recip saw, var sp, w/blades & cs	168
DW321K	top handle jig saw kit	158
DW359K	7 1/4" circular saw w/case	128
DW378G	7 1/4" framers saw	168
DW420	5" random orbit sander, psa	62
DW421	5" dstls rndm orb sander, velcro	67
DW423	5" vs dustls random orbit sander	79
DW431	3" x 21" dstls belt sander var sp	185
DW443	6" rt angld var sp ROS sanderw/h&l	132
DW610	1 1/2 hp router, 9 amp	144
DW621	2 hp vs dstls plunge router	198
DW677K	3 1/4 hp planer kit	149
DW682K	biscuit joiner kit	159
DW705	12" miter saw w/carb blade	358
DW708	*new* sliding comp. miter saw	644
DW733	*new* 12 1/2" portable planer	435
DW744	10" portable table saw	499
DW788	*new* 20" var. speed scrollsaw	448
DW965K	12v right angle drill kit	189
DW972K2	12v crdls kit/w battery & cs	179
DW972KS2	12v combo drill & saw kit	274
DW991K2	DW991K with two batteries	206
DW991KC2	14.4v drill & recip saw combo kit	372
DW991KL2	14.4v drill, circ saw, flashlight kit	349
DW991KS2	14.4V cdls drill & circ saw kit	338
DW995K	18V 1/2" drill w/batt, chrgr & cs	228
DW995KC2	18v drill & recip saw combo kit	395
DW995KS2	18V drill & saw combo kit	377
DW997K	18V hammer drill kit, 1/2" chuck	239
DW997KC2	18V hammer drill & recip saw kit	415

FedEx Federal Express

Most tools under 70 lbs. shipped Fed Ex Express Service for $9.00... call for details!

1-800-338-3384

* FREE FREIGHT & SAME DAY SHIPPING ON MOST UPS ORDERS OVER $50 MINIMUM PURCHASE WITHIN THE CONTIGUOUS U.S.A.

FAX US YOUR ORDER AT 1-954-792-3560

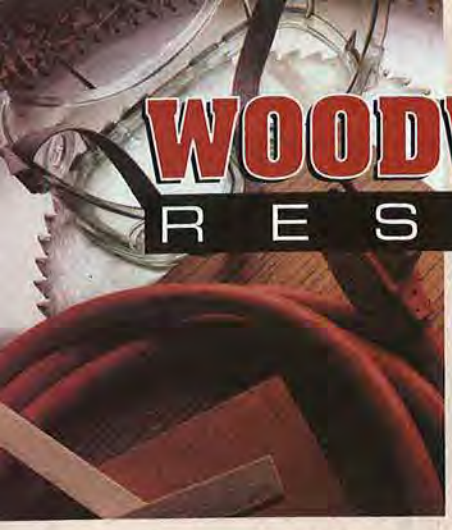

WOODWORKER'S RESOURCE

You can get useful ideas and product information by mail. Use the envelope in this section to order your choice of literature listed below. Each company mails the catalogs or information directly to you.

POWER TOOLS

A & I SUPPLY—Large selection, very modest pricing, superb service. All UPS orders over $75 freight-free in Continental USA. Free catalog in USA. **A & I SUPPLY.** Free. *Circle No. 1.*

SCROLL SAW, CRAFTS & WOODWORKING CATALOG—Our 1998 catalog features Hegner scroll saws, Apollo HVLP sprayers, Zyliss vises and Plano glue presses. **AMI, LTD.** $1.00. *Circle No. 3.*

FREE WOODWORKING TOOL CATALOG—Tool Crib of the North's catalog features the finest and most requested woodworking and construction tools available. **TOOL CRIB (ACME ELECTRIC).** Free. *Circle No. 6.*

TRANSPOWER, CP TOOLS INC.—A fine line of quality woodworking machinery, saws, shapers, planers and more. Send for free catalog. **CP TOOLS.** Free. *Circle No. 15.*

CLAYTON MACHINE—Sand curved pieces with ease. New American-made oscillating spindle sander features many unique details. Quality built, for a lifetime of enjoyable and dependable service. Dust collector hook-up, ground steel top, dynamically balanced spindle with sealed oil-bath cam and quick change drums are all standard. Several models to choose from. Catalog. **CLAYTON MACHINE.** Free. *Circle No. 18.*

NEW POWER TOOL ELIMINATES HAND SANDING —No more bloody knuckle, sore finger sanding. Unique sander, sands along edges and into corners, without bouncing off or running away. The secret is the distinct triangular sanding pad, combined with a high speed oscillation. German made. Brochure shows sander in action. **FEIN POWER TOOLS.** $1.00. *Circle No. 37.*

HARBOR FREIGHT TOOLS CATALOG—Carries over 4,000 tool and machinery items, all orders over $50 are shipped free, lowest prices guaranteed. Free catalog subscription. **HARBOR FREIGHT TOOLS.** Free. *Circle No. 46.*

INTERNATIONAL TOOL CORPORATION CATALOG —Features the finest tools and accessories at the guaranteed lowest prices. Free freight and same day shipping on most orders. **INTERNATIONAL TOOL CORP.** $2.00. *Circle No. 49.*

GRANBERG INTERNATIONAL—Manufacturers of portable chain saw tools—the Alaskan Saw Mill, Mini-Mill, Small Log Mill and sharpening accessories. Mill your own quality lumber! **GRANBERG INTERNATIONAL.** Free. *Circle No. 52.*

AWARD-WINNING DUST COLLECTION—Air cleaners, dust collectors, cyclone systems, hose, connectors, adaptors, hoods, remote switches, etc. 40-page free catalog. **PENN STATE INDUSTRIES.** Free. *Circle No. 75.*

HUGE VARIETY OF PENCRAFTING PRODUCTS—Including: 24 kt kits, lathes, duplicator and templates, wood and finishing supplies. 40-page free catalog. **PENN STATE INDUSTRIES.** Free. *Circle No. 75.*

PERFORMAX PRODUCTS, INC.—Eleven models with patented features. Abrasive plane dimension, fine finish sand. 200 dealers nationwide offer demonstrations. Reduce hand sanding today. **PERFORMAX PRODUCTS.** $0.50. *Circle No. 78.*

THE POWERMATIC CATALOG—Includes pictures, descriptions and specifications of the complete Powermatic line of woodworking machinery featuring heavy-duty production equipment as well as the Artisan line. **POWERMATIC.** Free. *Circle No. 81.*

RBINDUSTRIES—Hawk scroll saws, Universal wood planers, drum sanders, Panelmaster II, all American made, 5 year warranty. Buy factory direct. Free catalog. **RB INDUSTRIES, INC.** Free. *Circle No. 84.*

TOOLS ON SALE™—Offers a catalog of over 500 pages of the most popular brands of power tools available anywhere at discounted prices. **SEVEN CORNERS.** $1.00. *Circle No. 92.*

10 TOOLS IN 1—Ultimate Home Shop for woodworking or metalworking. Compact, easy to use, built to last. Free catalog. **SUPERSHOP.** Free. *Circle No. 100.*

HAND TOOLS

BAKLUND-HELLAR, INC.—Find Center Fast! CenterPoint™—the only tools with the new center-finding scale. Construction Grade™. Made in U.S.A. **BAKLUND-HELLAR, INC.** Free. *Circle No. 103.*

JAPAN WOODWORKER CATALOG—Woodworkers have discovered the secret of better quality work. 2 year subscription to 88 page catalog. **WOODLINE TOOL & SUPPLY.** $2.00. *Circle No. 190.*

PLANS

AMERICAN FURNITURE DESIGN CO.—Furniture plans by America's leading craftsmen. 36x48 CAD format and comprehensive instructions. Morris chairs, rolltop desk, 80+ designs. Catalog. **AMERICAN FURNITURE DESIGN CO.** $3.00. *Circle No. 314.*

ARMOR CRAFTS—Woodworker's plans and supplies. Over 100 high-quality plans, specialty hardware and other supplies offered by Armor. Catalog. **ARMOR PRODUCTS.** $1.00. *Circle No. 315.*

FURNITURE DESIGNS, INC.—Since 1968, foremost designers of plans for fine furniture. Furnish your house, build for customers. Catalog. **FURNITURE DESIGNS, INC.** $3.00. *Circle No. 345.*

TOYS AND JOYS, INC.—Executive wood toys, patterns, parts, wheels for making cars, trucks, trains, construction equipment. New 32-page catalog for the advanced toymaker. **TOYS AND JOYS, INC.** $1.00. *Circle No. 465.*

SCROLLSAW PATTERNS—Up to 74" clocks, 300+ patterns, books, clock parts, saw blades, tools, wood, and more. **WILDWOOD DESIGNS.** Free. *Circle No. 475.*

LUMBER

QUALITY EXOTIC LUMBER—Turning wood, burls, figured wood. Hand selected for your needs. Also manufacturer of pen kits. **BEREA HARDWOODS.** $1.00. *Circle No. 510.*

STEVE H. WALL LUMBER CO—Quality hardwoods, plywood, and exotic lumber. Will ship UPS or motor freight, wholesale prices. Catalog. **STEVE H. WALL LUMBER CO.** $1.00. *Circle No. 592.*

HARDWOODS—Over 100 quality woods from around the world. Lumber veneer, turning stock. Quantity discounts. UPS or truck shipment. Satisfaction guaranteed. **WOODWORKERS SOURCE.** $1.00. *Circle No. 598.*

GENERAL WOODWORKING CATALOGS

WOOD, VENEERS, INLAYS, CARVINGS—Plus hardware, glues, finishes, tools, books and more—all 100% guaranteed. Fast, friendly service, too. Where? Constantine's, of course! **CONSTANTINE'S.** Free. *Circle No. 820.*

THE WOODTURNERS CATALOG—Offers a complete line of pen and pencil kits along with the widest selection of turning tools and supplies anywhere—all at the best prices. **CRAFT SUPPLIES U.S.A.** $2.00. *Circle No. 830.*

GRIZZLY INDUSTRIAL, INC.—208 pages packed with thousands of woodworking machines, tools, and accessories—all at unbeatable prices. Catalog. **GRIZZLY INDUSTRIAL, INC.** Free. *Circle No. 860.*

HIGHLAND HARDWARE WOODWORKING CATALOG—Giant catalog of hard-to-find woodworking tools loaded with detailed product descriptions and informative techniques. **HIGHLAND HARDWARE.** Free. *Circle No. 870.*

WOODCRAFT—Our free catalog features over 6,000 woodworking tools, books, lumber and hardware. Same day shipping and an unconditional guarantee! **WOODCRAFT SUPPLY CORP.** Free. *Circle No. 955.*

THE WOODWORKERS' STORE—Our catalog helps woodworkers do it right! New products, innovative tools, and hard-to-find specialties. Satisfaction guaranteed! Catalog. **WOODWORKERS' STORE.** Free. *Circle No. 965.*

KITS

QUEEN ANNE KITS—Dining chairs & occasional tables, ready to assemble & finish, plus furniture components—solid cherry, oak, mahogany, walnut. Free catalogue. **ADAMS WOOD PRODUCTS.** Free. *Circle No. 1002.*

SHIP MODELING CATALOG—Museum quality replicas you build yourself. Laser cut wooden parts, metal fittings, easy instructions. 120-page color catalog. **MODEL EXPO.** $1.00. *Circle No. 1075.*

PUBLICATIONS

AMERICAN ASSOCIATION OF WOODTURNERS—Join over 7,400 woodturners, gallery owners, collectors, suppliers, receive a quarterly journal, resource directory and information about our national symposiums. $1 for information. **AM. ASSN. OF WOODTURNERS.** $1.00. *Circle No. 1110.*

FREE CRAFTS AND WOODWORKING CATALOG—Over 800 books on woodcarving, furniture making, wooden toys, construction, more. Most $2.95—$6.00! **DOVER PUBLICATIONS.** Free. *Circle No. 1118.*

SHOP ACCESSORIES

ECON-ABRASIVES—Complete line of sandpapers and woodworking-related accessories, custom-made abrasive belts, any size or grit. Catalog. **ECON ABRASIVES.** Free. *Circle No. 1229.*

EASY DOES IT—with HTC'S power tool accessories. Discover many unique items, designed only with you, the dedicated woodworker, in mind. Make your machinery safer, increase the working area of your shop and accomplish nearly impossible tasks easily, quickly, accurately. Full-line catalog and price list. **HTC PRODUCTS, INC.** Free. *Circle No. 1245.*

THE ACCU-MITER—If you consider yourself a serious woodworker, this professional quality miter gauge is for you! The Accu-Miter is the perfect tool to create precise angles in a snap. The Accu-Miter's tapered shot pin assures dead-on accuracy year after year. The maximum margin of error is one minute, 43 seconds. That's less than 1/30th of a degree. That's guaranteed! Brochure. **JDS COMPANY.** Free. *Circle No. 1246.*

MOISTURE METERS FOR WOOD—Pin-type meters that measure moisture in veneer to logs. Send for free catalog. **LIGNOMAT USA, LTD.** Free. *Circle No. 1250.*

SUPERGRIT® SANDING/REFINISHING CATALOG & CLOSE-OUT SHEET—Belts, discs (PSA or Hook & Loop), sheets (aluminum oxide, garnet, silicon carbide), rolls, pads, etc. **RED HILL CORP.** Free. *Circle No. 1267.*

WOODMARK—A commercial-style downdraft workbench for the home workshop. A very powerful ambient air-filtration system. In a spacious traditional-style maple workbench. **WOODMARK.** $1.00. *Circle No. 1295.*

BITS, BLADES, CUTTING TOOLS

ROUTER BITS & SAW BLADES—The only orange one. New products in free catalog—order yours. **CMT USA.** Free. *Circle No. 1312.*

FREUD—Premier carbide-tipped sawblades, router bits and shaper cutters. A full-line of anti-kickback carbide-tipped router bits. Catalog. **FREUD.** Free. *Circle No. 1321.*

JESADA TOOLS' FREE CATALOG—Packed with bits, blades, cutters, knives and more; plus accessories, project ideas and safety tips. **JESADA TOOLS.** Free. *Circle No. 1335.*

PRODUCTION QUALITY CARBIDE TIPPED ROUTER BITS—Large discounts. Also, raised panel door sets, shaper cutters, solid carbide bits, Forstner bits, the Merle Clamp and a variety of woodworking tools and supplies. FREE shipping. **MLCS LTD.** Free. *Circle No. 1350.*

SUPER CARBIDE TIPPED ROUTER BITS AND SHAPER CUTTERS—Offered at the lowest prices for items of such high quality. Catalog. **WOODLINE ARIZONA INC.** Free. *Circle No. 1395.*

INCOME OPPORTUNITIES

RESTORE FURNITURE—Complete system features stripping, repair, finishing, parts duplicating, veneering, resilvering. Wholesale products, free classes. Catalog. **MINUTEMAN.** Free. *Circle No. 1661.*

MISCELLANEOUS

ANDERSON MANUFACTURING UNDERBED STORAGE DRESSER—Top quality, solid wood, ready-to-assemble kits provide convenient space-saving storage. 3-16 drawers. Starts at $159. Free 48-page catalog. **ANDERSON MFG.** Free. *Circle No. 1795.*

HANDMADE PIERCED TIN—80+ page colorful catalog. 100's of designs & sizes, 18 types of metal, do-it-yourself materials, tools, & kits, too! **COUNTRY ACCENTS.** $5.00. *Circle No. 1910.*

WIRELESS DRIVEWAY ALARM—An alert sounds in the house when someone enters the drive. Be sure to order our free literature. **DAKOTA ALERT, INC.** Free. *Circle No. 1914.*

WIPER BLADE SHARPENER—Improve wiper blade performance for clearer/safer view. Blades last up to 24x longer. No streaks/sqeaks. Save $, time and maybe your life. Special info for WOOD subscribers. **EASY SHARP.** $1.00. *Circle No. 1923.*

FUTURE STEEL BUILDINGS—Multi-purpose, arch-type structures. Ideal backyard shops & garages. Many models & sizes. Complete kits for the do-it-yourselfer. Free information. **FUTURE STEEL BUILDINGS.** Free. *Circle No. 1945.*

TRUCK OWNERS, THE ROLL-TOP COVER™ IS QUICK AND EASY!—Secure your truck bed with our retractable tonneau cover. **PACE-EDWARDS CO.** Free. *Circle No. 1985.*

PLANNING TO BUILD?—We manufacture a complete range of steel buildings, tested and built to withstand wind, snow, rain and seismic conditions. **PIONEER STEEL MFG., LTD.** Free. *Circle No. 1986.*

STEELMASTER BUILDINGS—The leader in arch-type steel buildings. Ideal for backyard shops, garages and much more. **STEELMASTER.** $1.00. *Circle No. 2030.*

WHOLESALE GLASS BROKERS—High-quality glass shipped to you from the finest manufacturers. Table tops, tempered glass, shelves, beveled glass, tinted, custom shapes; 1/4" to 3/4" thick, etc. Catalog. **WHOLESALE GLASS BROKERS.** Free. *Circle No. 2079.*

LEGAL IVORY—Virtually identical to animal ivory. Tagua is the nut from a tropical palm tree. Ideal for jewelry, knobs, small turnings, inlay, or scrimshaw. Available in 3 sizes. Send for information. **WOODWORKERS SOURCE.** Free. *Circle No. 2090.*

PEN AND PENCIL PRODUCTION SYSTEMS—State of the art mini-lathes, all components, including wood, at best prices. **WOODWRITE, LTD.** Free. *Circle No. 2098.*

CARVING SUPPLIES

ADD VALUE TO ANY WOODWORKING PROJECT—Ultra high speed engraving with stencil patterns insures professional results. Engraves on any surface. **PARAGRAPHICS.** $1.00. *Circle No. 2160.*

HI-SPEED ENGRAVING—400,000 RPM's. Engrave on wood, glass, metal, eggs. It's as easy as drawing with a pen. No artistic talent needed. Send for information, catalog. **SCM ENTERPRISES.** $1.00. *Circle No. 2165.*

WOOD CARVING & WOOD SIGN MAKING MACHINES—Make wood signs and wood carvings easy, quickly and accurately. Signs, gun stocks, decoys or furniture parts. **TERRCO, INC.** $1.00. *Circle No. 2175.*

TURNERS AND CARVERS—Largest selection of Henry Taylor turning and carving tools in USA. Also Sorby, OneWay, Foredom, Stewart, Glaser & Sherline. **THE CUTTING EDGE.** $1.00. *Circle No. 2180.*

ULTRA SPEED PRODUCTS—The ultimate in precision carving, engraving & inlaying. As simple as tracing lines. Affordable, $170.00 package, includes everything you need to get going. Video & catalog available. **ULTRA SPEED PRODUCTS, INC.** Free. *Circle No. 2185.*

WOODTURNING SUPPLIES

WOODTURNING TOOLS, PROJECTS, & SUPPLIES!—Best selection anywhere. Sorby, Oneway, Delta, Glaser. Complete line Sorby turning, carving, and woodworking tools. **WOODCRAFTERS OF OKLAHOMA.** Free. *Circle No. 2195.*

CLAMPS

GROSS STABIL—Offers a full line of German-made high-quality woodworking clamping products. Catalog features everything from sliding arm, parallel, edge-gluing, corner, miter and many other specialty clamps. **GROSS STABIL.** Free. *Circle No. 2230.*

MERLE ADJUSTABLE CORNER CLAMP—Adjustable, uniform clamping pressure on all corners. Forces a frame into perfect square. Almost no capacity limitation. Ships with 23 foot reel of steel banding. Aluminum and steel construction. **MLCS LTD.** Free. *Circle No. 2250.*

CLOCKS

THE CLOCK SHOP—Brass clock kit movement, no plastic parts, no parts stamped out. All parts 100% machined. Assemble with simple hand tools. **THE CLOCK SHOP.** Free. *Circle No. 2325.*

KLOCKIT—The leading supplier of clock-making supplies for over 25 years: Quartz and mechanical movements, clock inserts, dials, easy-to-follow plans and kits for all skill levels. **KLOCKIT.** Free. *Circle No. 2335.*

CLOCK PARTS CATALOG—Clock parts, kits, dials, hands, tools, hardware, quartz and mechanical movements, inserts, watches, gifts and novelty items. Your satisfaction guaranteed. **S. LA ROSE INC.** Free. *Circle No. 2375.*

FASTENING PRODUCTS

SQUARE DRIVE SCREWS—Can make your woodworking easier. Over 80 color pages of the best fasteners and other woodworking supplies. **MCFEELY'S.** $1.00. *Circle No. 2450.*

SHOWS & SEMINARS

****THE WOODWORKING SHOWS* MACHINERY, TOOLS AND SUPPLIES***—Hundreds of products for the woodworker demonstrated and sold at discount prices at every *Woodworking Show*. In-depth seminars and free workshops on a variety of woodworking topics. Shows are scheduled in 27 cities. Send for free brochure. **WOODWORKING SHOWS.** Free. *Circle No. 2900.*

WOODLINE Bits & Cutters feature:

- Tough European Carbide
- Euro Anti-Kickback Design
- Super-slick Non-stick finish.

WOODLINE ARIZONA, Inc

P.O. Box 1530 • Payson, AZ 85547

Great Router Bits & Shaper Cutters!

"Why pay more or accept less!"

Get your FREE catalog and see our great selection of Bits and Cutters 1-800-472-6950

Roundover Bits
with Bearing

1/4" Shank	Radius	
WL-1040	1/16"	$9.
WL-1041	1/8"	$9.
WL-1042	3/16"	$9.
WL-1043	1/4"	$9.
WL-1044	5/16"	$10.
WL-1045	3/8"	$11.
WL-1046	1/2"	$13.
1/2" Shank		
WL-1049	1/8"	$9.
WL-1042-5	3/16"	$9.
WL-1050	1/4"	$9.
WL-1044-5	5/16"	$10.
WL-1051	3/8"	$12.
WL-1052	1/2"	$13.
WL-1053	5/8"	$16.
WL-1054	3/4"	$18.
WL-1055	7/8"	$25.
WL-1056	1"	$27.
WL-1057	1-1/8"	$30.
WL-1058	1-1/4"	$30.

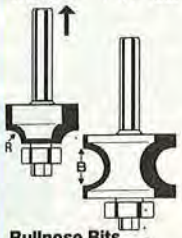

Bullnose Bits
with Bearing
1/4" Shank • Bead Opening

WL-1100	1/4"	$12.
WL-1101	3/8"	$14.
WL-1102	1/2"	$16.
WL-1103	5/8"	$18.
WL-1104	3/4"	$19.
1/2" Shank		
WL-1110	1/4"	$12.
WL-1111	3/8"	$14.
WL-1112	1/2"	$16.
WL-1113	5/8"	$18.
WL-1114	3/4"	$19.
WL-1115	1"	$22.
WL-1116	1-1/8"	$25.
WL-1117	1-1/4"	$28.
WL-1118	1-1/2"	$32.

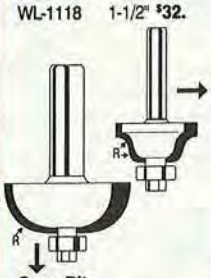

Cove Bits
1/4" Shank • Radius

WL-1159	1/8"	$10.
WL-1160	3/16"	$10.
WL-1161	1/4"	$11.
WL-1162	3/8"	$13.
WL-1163	1/2"	$14.

Cove Bits (continued)
1/2" Shank

WL-1169	1/8"	$10.
WL-1170	1/4"	$11.
WL-1171	3/8"	$13.
WL-1172	1/2"	$14.
WL-1173	5/8"	$18.
WL-1174	3/4"	$20.

Chamfer Bits
1/4" Shank • Degree

WL-1180	15°	$10.
WL-1181	25°	$10.
WL-1182	45°	$12.
WL-1183	45°	$14.
(for up to 3/4" material)		
1/2" Shank		
WL-1184	45°	$10.
WL-1185	11-1/2°	$12.
WL-1186	15°	$12.
WL-1187	22-1/2°	$12.
WL-1188	30°	$14.
WL-1189	45°	$15.
WL-1190	45°	$22.
(for up to 1-1/4" material)		

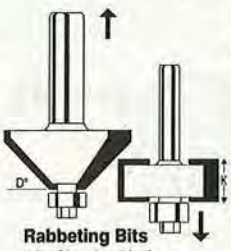

Rabbeting Bits
1/4" Shank • Kerf

WL-1220	1/2"	$11.
WL-1220-2	1/16"	$10.
WL-1220-3	1/8"	$10.
WL-1220-4	1/4"	$10.
WL-1220-5	3/8"	$10.
1/2" Shank		
WL-1225	1/2"	$11.
WL-1225-2	1/16"	$10.
WL-1225-3	1/8"	$10.
WL-1225-4	1/4"	$10.
WL-1225-5	3/8"	$10.
WL-1225-6	3/4"	$12.

Roman Ogee Bits
1/4" Shank • Radius

WL-1230	5/32"	$13.
WL-1231	1/4"	$15.
1/2" Shank		
WL-1235	5/32"	$13.
WL-1236	1/4"	$15.

Double Roman Ogee
1/4" Shank • Radius

WL-1240	5/32"	$18.
WL-1241	1/4"	$20.
1/2" Shank		
WL-1245	5/32"	$18.
WL-1246	1/4"	$20.

Ask about our unique "Does It All" ROUTER TABLE

Classical Ogee Bits
1/4" Shank • Radius

WL-1250	5/32"	$18.
WL-1251	1/4"	$20.
1/2" Shank		
WL-1252	5/32"	$18.
WL-1253	1/4"	$20.

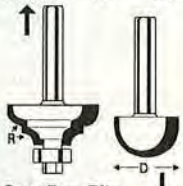

Core Box Bits
1/4" Shank • Diameter

WL-1370	1/8"	$10.
WL-1371	1/4"	$8.
WL-1371-1	3/8"	$9.
WL-1372	1/2"	$10.
WL-1373	3/4"	$12.

Roundnose/Core Box
1/2" Shank • Diameter

WL-1375	1/4"	$8.
WL-1375-1	3/8"	$11.
WL-1376	1/2"	$12.
WL-1377	3/4"	$14.
WL-1378	1"	$16.

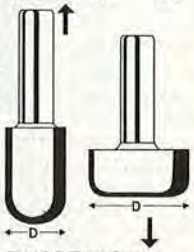

Bowl & Tray Cutter
1/4" Shank • Diameter

WL-1380	7/16"	$13.
WL-1381	3/4"	$15.
1/2" Shank		
WL-1385	3/4"	$15.
WL-1386	1-1/4"	$18.

Dado & Planer Bit
1/4" Shank • Diameter

WL-1390	3/4"	$12.
1/2" Shank		
WL-1391	3/4"	$12.
WL-1392	1"	$14.
WL-1393	1-1/4"	$15.
WL-1394	1-1/2"	$16.
WL-1394-1	2"	$28.

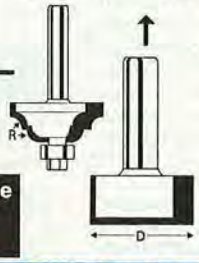

Pattern Cutting Bit
1/4" Shank • Diameter

WL-1400	1/2"	$12.
WL-1401	5/8"	$12.
WL-1402	3/4"	$12.
1/2" Shank		
WL-1405	3/4"	$15.
WL-1406	1-1/8"	$16.

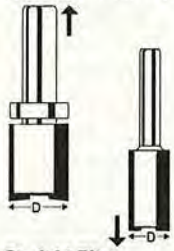

Straight Bits
1/4" Shank • Diameter

WL-1001	1/8"	$10.
WL-1002	3/16"	$5
WL-1002-5.5	5.5mm	$5.
(for undersized 1/4" plywood)		
WL-1003	1/4"	$5.
WL-1004	5/16"	$5.
WL-1005	3/8"	$5.
WL-1006	15/32"	$5.
(for undersized 1/2" plywood)		
WL-1007	1/2"	$6.
WL-1008	9/16"	$6.
WL-1009	5/8"	$7.
WL-1010	23/32"	$8.
(for undersized 3/4" plywood)		
WL-1011	3/4"	$9.
WL-1012	1"	$10.
1/2" Shank		
WL-1020	15/64"	$5.
(for undersized 1/4" plywood)		
WL-1021	1/4"	$5.
WL-1019	5/16"	$5.
WL-1022	3/8"	$5.
WL-1023	7/16"	$5.
WL-1024	15/32"	$5.
(for undersized 1/2" plywood)		
WL-1025	1/2"	$6.
WL-1027	5/8"	$8.
WL-1028	23/32"	$8.
(for undersized 3/4" plywood)		
WL-1029	3/4"	$9.

Corner Lock Mitres
For up to 5/8" material
WL-1420-2 1/4" shank $25.

For 1/2" to 3/4" material
WL-1420-1 1/2" shank $30.

For material 3/4" to 1-1/4"
WL-1420 1/2" shank $38.

For the Shaper Lock Mitre WL-1581 $40.

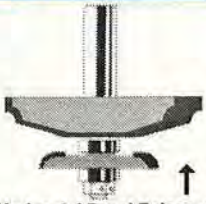

Horizontal Panel Raiser - 3 1/2" Dia. with Undercutter • 1/2" Shank

WL-1346	Ogee	$49.
WL-1347	Traditional	$49.
WL-1348	Convex (Cove)	$49.
WL-1359	12° Facecut with Quarter Round	$49.
WL-1363	Wave	$49.

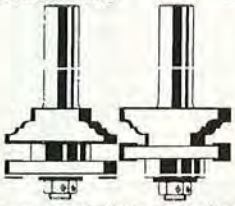

2-piece Rail & Stile Cutter Sets

1/2" Shank		Set
WL-1360	Ogee Profile	$59.
WL-1361	Roundover	$59.
WL-1362	Cove & Bead	$59.

1-piece Rail & Stile Cutter Sets
Just raise the cutter to make the matching cut. No changing or reversing.
1/2" Shank

WL-1365	Ogee Profile	$49.
WL-1366	Roundover	$49.
WL-1367	Cove & Bead	$49.
WL-1368	Wedge	$49.
WL-1374	Dbl Roundover	$49.

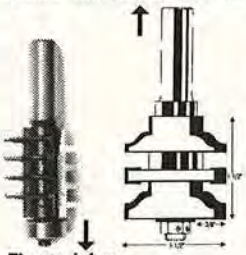

Finger Joiner Router Bit
WL-1429 $39.

For the Shaper WL-1580 $89.

Reversible Glue Joint
WL-1430 1-3/4" Diam $35.

For the Shaper WL-1706 $35.

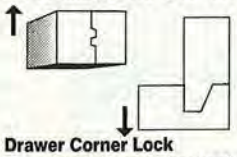

Drawer Corner Lock
Makes drawer side separation virtually impossible
1/2" Shank
WL-1435 For 1/2" material $30.

SHAPER CUTTERS 3/4" BORE
Corner Round

WL-1509	1/8"	$22.
WL-1510	1/4"	$24.
WL-1511	3/8"	$26.
WL-1512	1/2"	$26.
WL-1513	3/4"	$30.
WL-1514	1"	$32.
WL-1515	1-1/4"	$38.

Bead

WL-1520	1/4"	$24.
WL-1521	3/8"	$26.
WL-1522	1/2"	$26.
WL-1523	3/4"	$28.
WL-1524	1"	$30.

Flute

WL-1530	1/4"	$24.
WL-1531	3/8"	$26.
WL-1532	1/2"	$26.
WL-1533	3/4"	$28.
WL-1534	1"	$30.

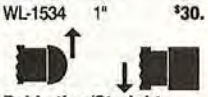

Rabbeting/Straight

WL-1540	1/4"	$24.
WL-1541	3/8"	$26.
WL-1542	1/2"	$26.
WL-1543	3/4"	$28.
WL-1544	1"	$30.
WL-1545	1-1/2"	$32.
WL-1546	2"	$48.

WL-1500 WL-1501 WL-1502 WL-1503

SHAPER CUTTERS 3/4" BORE
1-piece Rail & Stile
Just raise the cutter to make the matching cut. No changing or reversing.

WL-1500	Roman Ogee	$89.
WL-1501	Roundover	$89.
WL-1502	Cove & Bead	$89.
WL-1503	Dbl Roundover	$89.

WL-1600
WL-1601
WL-1602
WL-1603
WL-1604
WL-1605

Panel Raisers (Shaper Cutter)
3/4" Bore

WL-1600	Ogee	$59.
WL-1601	15° Facecut	$59.
WL-1602	18° Traditional	$59.
WL-1603	Convex (Cove)	$59.
WL-1604	12° Facecut with Quarter Round	$59.
WL-1605	Wave	$59.

• All Major Credit Cards Accepted • Shipping is only $3.75 per order • Most items in stock • Same-day shipping!!

Order Toll Free 1-800-472-6950 • 24 hours a day • 7 days a week

Top Rated PSI Dust Collection Systems

ON SALE NOW!

THIS ONE-TIME ONLY SUPER DUST COLLECTOR SALE ENDS ON JANUARY 30, 1999

1997 WOOD MAGAZINE EDITORS' CHOICE TOP TOOL™ TOP VALUE™ WOOD MAGAZINE APRIL 1997 ISSUE

THESE MODELS INCLUDE:

5 MICRON COLLECTION BAGS	Captures the finest sawdust. 6 times better filtration than the bags sold with our competitor's collectors.
FLEXIBLE COLLECTION HOSE	Strong, flexible and durable. Reinforced with .050 wire- no grounding required!

SUPER DC250 DUST COLLECTOR

- Powerful 2-1/2 hp motor
- 1350 CFM capacity

Award Winner!* Our most powerful system is perfect for multiple machine and long runs. It's great for any home or commercial shop!

FREE! 50' HOSE $40 Value

With 5 Micron Super High Filtration Bags!

Was $354.95 • Save $20

NOW ONLY $334.95 FOB PHILA.

DC3-5 PORTABLE DUST COLLECTOR-AIR HANDLER

- 1-1/2 hp motor • 750 CFM

Award Winner!* Compact, powerful, and portable, this lightweight 50 lb. unit can be moved to the job or mounted as an air handler!

FREE! 8' HOSE $12 Value

With 5 Micron Super High Filtration Bags!

Was $214.95 • Save $10

NOW ONLY $204.95 UPS $21

DC1B-5 DUST COLLECTOR

- Efficient 1 hp motor
- 700 CFM capacity

Award Winner!* Our most popular system connects to almost any machine! The "Y" outlet allows two 4" connections.

FREE! 8' HOSE $12 Value

With 5 Micron Super High Filtration Bags!

Was $219.95 • Save $10

NOW ONLY $209.95 UPS $29

DC2-5 DUST COLLECTOR

- Powerful 110V 1-1/2 hp motor
- 900 CFM capacity

Provides nearly the same performance as units with 2 hp and up. Suitable for long runs of hose.

FREE! 50' HOSE $40 Value

With 5 Micron Super High Filtration Bags!

Was $309.95 • Save $10

NOW ONLY $299.95 UPS $40

Container and flexible collection hose not included.

COMPLETE CYCLONIC DUST COLLECTION SYSTEMS

We've combined the motor blowers from our award winning collectors with our super efficient cyclone to create two outstanding collection systems!

With 5 Micron Super High Filtration Bags!

HOME SHOP SUPER SYSTEM
- *1-1/2 HP Motor*
- *750 CFM*
- *90 lbs • 88" high*

ITEM #CYDC3
FOR ONLY $499.95 UPS $40

PROFESSIONAL SUPER SYSTEM
- *2-1/2 HP Motor*
- *1350 CFM*
- *140 lbs • 92" high*

ITEM #CYDC250
FOR ONLY $599.95 FOB PHILA.

AIR CLEANING SYSTEMS

Clean the air you breathe!

Removes sawdust, drywall dust and more! The features of these lightweight, galvanized steel units were highest rated by Wood Magazine. The two filter system removes dust and impurities with a 12" x 24" washable pre-filter, and a High Efficiency internal bag filter. Requires no outside venting. 110V motor.

For shop size: 20' x 20' x 8'
#AC465/465 CFM
SALE PRICE $239.00 UPS $14

For shop size: 20' x 42' x 8'
#AC930/930 CFM
SALE PRICE $339.00 UPS $20

CALL, WRITE, OR VISIT OUR WEB SITE FOR A FREE CATALOG!

Penn State Industries

Order Toll Free **1-800-377-7297**

2850 Comly Road, Philadelphia, PA 19154 • www.pennstateind.com

2 YEAR WARRANTY 1 YEAR ON MOTOR

VISA MasterCard DISCOVER

VISIT US ON THE WEB!

WOOD® CLASSIFIED MART

For rates: 1-800/424-3090 Fax 312/464-0512

AUTOMOTIVE

SEIZED CARS FROM $175. Porsches, Cadillacs, Chevys, BMW's, Corvettes. Also Jeeps, 4WD's. Your Area. Toll Free 1-800/218-9000 Ext. A-14094 for current listings.

FINANCIAL SERVICES

FREE CASH GRANTS! College. Scholarships. Business. Medical bills. Never repay. Toll Free 1-800/218-9000 Ext. G-14094.

FINISHING/RESTORATION

LINE BOXES EASILY. Spray-on suede. 31 colors. Free Brochure. DonJer Products, Ilene Court-Bldg. 8W, Bellemead, NJ 08502. 1-800/336-6537.

HELP WANTED

EASY WORK! EXCELLENT PAY! Assemble Products at Home. Call Toll Free 1-800-467-5566 EXT. 11856.

INVENTIONS

IDEAS, INVENTIONS, NEW PRODUCTS! One of America's leading invention firms can help you submit to industry. Patent services. Call 1-800/288-IDEA.

MUSIC/SUPPLIES

PLANS, KITS, SUPPLIES for musical instruments: harps, dulcimers, psalteries, banjos, guitars, more. Musicmaker's Kits, Dept. B98, PO Box 2117, Stillwater, MN 55082. 612/439-9120.

PLANS/KITS/PATTERNS

21 CARS AND TRUCK PATTERNS. Use with 1-1/2" thick wood. Send $9.25 or ask for free brochure: West Products, PO Box 4943, Lancaster, PA 17604-4943.

FURNITURE PLANS. Rolltop desk, Cradle, Winerack, and many conventional designs. Catalog $3.00: Lake Superior Design, Box 751, Grand Marais, MN 55604-0751.

BLUEPRINTS, WOODEN STAGECOACH, covered wagon, buckboard, easy wheels, $6.00 each, $16.00 all. D/Enterprises, 8753 85th St. NW, Pine Island, MN 55963.

TOOLS/EQUIPMENT

BAND SAW BLADES: Low tension Swedish Silicon Steel "TIMBERWOLF" bands. 1/16" thru 1 1/4". FREE CATALOG 1-800/234-7297. Email-timberwolf2@worldnet.att.net HOME PAGE-timberwolf1.com

WOOD/LUMBER

CUSTOM CUT WOOD. Specializing in Osage Orange ($12.95/ft.) and other quality woods. Cut to your specifications. No minimum order. spradlin@adams.net 217-285-4336.

HEGNER Scroll Saws

THE EXPERTS' CHOICE

"I have personally owned and enjoyed HEGNER Saws for over twelve years. HEGNER's smooth, quiet performance is only one of many unique advantages. Choose a HEGNER and you'll enjoy scrolling the way it's meant to be."

— Patrick Spielman

America's #1 Woodworking Author and Publisher of Home Workshop News

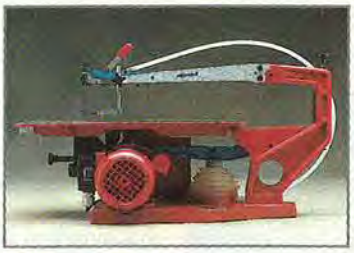

For over twenty years, HEGNER Scroll Saws have been the experts' choice because of features like space-saving design, fast and easy blade changes, unmatched reliability, and superior warranties. Call for your FREE Catalog today.

Home Workshop News is packed with detailed project patterns and instructions, news, tips and techniques. Subscribe now for only $19.95 per year (6 issues).

If you order a HEGNER saw before December 31, 1998, we will give you a FREE one year subscription to Home Workshop News.

Call for your FREE Catalog or to order your Home Workshop News subscription now.

1.800.727.6553

ADVANCED MACHINERY

P.O. BOX 312 • DEPT. 893 • NEW CASTLE DE 19720 • WWW.ADVMACHINERY.COM

Circle No. 3

Circle No. 15

Visit *WOOD*® magazine on the World Wide Web

at http://www.woodmagazine.com

Better Homes and Gardens®

WOOD Online™

Buy WOOD® PLANS on the Internet in our company store

A WOODWORKING INFORMATION SERVICE FROM THE EDITORS OF WOOD® MAGAZINE

- **Discussion Groups** — Talk with other woodworkers
- **Woodworking Sources** — Comprehensive database of woodworking sources for tools, supplies, and lumber
- **Tour Our Workshops** — A "virtual" tour of the *WOOD* magazine workshops
- **Current Issue** — Overview of the latest issue of *WOOD*
- **Company Store** — *WOOD* products for sale
- **Index** — Search through past issues of *WOOD*
- **Software Library** — Download valuable woodworking software

http://www.woodmagazine.com

A&I Supply

FREE SHIPPING!
(On orders over $75 in the Cont. U.S.)

Celebrating 20 Years of Service

VISA · MasterCard · DISCOVER · AMERICAN EXPRESS

Route 29 • N. Pekin, IL 61554
email: *aisupply@mtco.com*

We Sincerely Appreciate Your Business!

To Order Call Toll Free:
1-800-260-2647

24 Hr. Fax Orders: (309) 382-1420

Limited Quantities & Prices Subject to Availability

BINKS

HVLP Spray Gun
Use with only 1-1/2 H.P. compressor! Now you don't have to rely on a limited turbine. Great for a wide range of materials. Includes gun and one quart cup, 25 ft. 3/8" air hose with connection and air regulator with gauge.
#BKS 98-1121
CALL FOR SPECIAL PRICE!

BOSCH

1613EVS **2HP Plunge Router** $188.00
1615EVS **3-1/4 HP Plunge Router** $299.00
NEW! *1617EVS* **2HP EVS Router** $186.00
NEW! *1618* **1-3/4 HP D-Handle Router** $178.00
1276DVS **4x24 Variable Speed Belt Sander** $218.00
3315K **12V Cordless Drill Kit** w/ Case & 2 Batteries $159.00
3615K **14.4V Cordless Drill Kit** w/ 2 batt., case & charger ... $173.90
3107DVS **5" H.D. R/O Sander-Polisher** $94.60
3725DVS **5" H.D. R/O Sander-Polisher** $131.00
3915 **10" Slide Compound Miter Saw** $535.00
NEW! *1295DH* **5" Swift Sand R/O Palm Sander** $86.50
NEW! *1587AVSP* **Jigsaw Kit w/ 9 assorted blades & case** ..$158.90

RYOBI

RYB WDS1600P **16/32" Drum Sander** with FREE stand ($85.00 value) only $568.90
RYB DBJ50 Detail Biscuit Joiner $68.90

SENCO

NEW! *910001N* **5/8 - 1¼" Brad Nailer w/case** .$99.75
NEW! *920001N* **5/8 - 2" Brad Nailer w/case** $134.50
NEW! *900001N* **1/2 - 1" (1/4" crown) Stapler** $119.90
NEW! *950001N* **1/2 - 1⅜" (1/4" crown) Stapler** $144.50
SLP20 **Brad Nailer** $208.95
SFN1+ **1-2" Finish Gun** $292.95
SFN40 **1-2½" Finish Gun** w/case $348.90
SKS **Med. Duty Stapler** $248.00
NEW! *PRO600* **Framing Nailer**.. $362.90
SCN40R **Roofing Nailer** $387.90
SN60 **Full Round Head Nailer** $388.90
PC0701 **A9 Palm Nailer**...$159.00

STANLEY BOSTITCH

RN45B-1 **¾"-1¾" Coil Roofing Nailer** $367.90
N80SB-1 **2"-3½" Framing Stick Nailer** $348.00

FEIN

FEIN Turbo II - Dust Free Vacuum
Powered by 2-stage motor w/ bypass cooling to assure motor runs cool even if the hose or filter is blocked. Excellent Quality!
FIN 9-55-13 ..... $247.95
FIN MSXE-636-2 **VS Triangle Sander w/ Case** $169.00

PORTER-CABLE

Brad Nailer & Air Compressor Combo Kit
Choice of BN125 or BN200 includes: 1 HP compressor, brad nailer kit, 25 ft. air hose and M/F hose connections.
$596 List Value
#PCT CFBN125 SALE $258.90
#PCT CFBN250 SALE $296.00

PORTER-CABLE

NEW! *557* **Plate Joiner Kit**
•Does mini size biscuits & standard size •7.5 amp motor. •Tilt-fence does not have to be removed for flush cuts. •7-position depth stop •Fence let's you position your cut from outside face •Includes case, dust bag, 2" & 4" blades & extra biscuits.
SUPER SALE $197.90

Brad, Finish & Framing Nailer Kits
All kits include case
NEW! *CDA250* **15G Cordless Angle Finish Nailer** $277.00
BN125 **18G** ⅝"-1¼" Brad $89.00
BN200 **18G** Brad Nailer Kit .. $122.50
DA250A **15G** 1¼"-2½" Finish .. $214.90
FN 250A **16G** ⅝"-2½" Finish .. $183.00
NS150 **18G** ½"-1¼" **Crown Stapler** $136.90
FC350 **Clipped Head** 2"-3½" Framing Nailer Kit $287.00
FR350 **Full Round Head** 2"-3½" Framing Nailer Kit $287.00

693PK **1-1/2 HP Plunge Router Kit** includes 690 w/ fixed base & plunge base w/ case $188.00
690 1¼ **HP Router**. ... $142.00
691 1¼ **HP HDL Router** $159.00
693 **Plunge Base Router** $178.00
6931 **Plunge Base Only** ... $82.00
6911 **D-Handle Base Only** ... $72.00
7539 3-1/4 **HP Plunge Router** - Plus Free Fine Depth Adjuster ($26.50 Value) $294.90
7518 3-1/4 **HP 5SP FB Router** $279.90
42000 **8 pc. Templet Guide Kit** $29.95
97310 **Laminate Trim Kit** .. $192.50
697 **Router Table** w/ 1¼ H.P. Router $233.00
698 **Router Table** w/out motor $133.50
9862F **12V Cordless Drill Kit w/ Free Flashlight**...$158.90
9872 **14.4V Cordless Drill Kit** w/two batteries, case & charger $182.00
9872R **14.4V Recon Kit.** ... $158.90
9444 **Sander Kit** $103.50
330 **Speed Block Sander** ...$68.00
332 **5" QS Palm Sander** ... $59.90
333 **5" QS R/O Dst Sdr H&L** ... $64.90
333VS **VS R/O Palm Sander** $78.00
334 **5" QS R/O Dustless Sdr** $64.90
352VS **VS Belt Sander** ... $177.00
7335 **5" VS R/O Sander** ... $132.00
97355 **5" VS R/O Sander** with Dust Collection & Case $149.00
552 **Prod. Pocket Cutter** ... $589.90
7800 **Drywall Sander** $348.80
5554 **1000 Pc. Asst. Biscuits** $22.50
362 **4x24 Belt Sander w/ Bag** $227.90
362VS **4 x 24 VS Belt Sander & Bag** $238.00
360 **3x24 Belt Sander w/ Bag** $212.00
360VS **3x24 VS Belt Sander & Bag** $224.00
347K **7-1/4 Circular Saw w/Case** $127.90
743K **L/H 7-1/4 Circular Saw w/ Case** $127.90

DeVilbiss

The top name in spray finishing is ready for your woodworking needs.
FLG-622-322 **HVLP Suction Gun** $159.95
FLG-631-318 **HVLP Gravity Gun** $169.95

DELTA

12-1/2" Planer
Features: •Quick change knife system •Exclusive cutterhead-snipe control lock •Easy-to-read English and Metric scale.
BONUS: Free Extra Set of Planer Knives & Dust Chute!
#DEL 22-560P *List Price $568.00* **SALE.....$328.50**

DELTA

30" Table Board CTE 2731 $23.90
52" Table Board CTE 2747 $28.90
Uni-Saws With Biesemeyer or Uni-fence
NEW! *36-800* **White Classic Edition Unisaw** w/50" Biesemeyer Fence $1599.00*
36-830 **3H.P.** w/30" Uni-fence ...$1399.00*
36-831 **3H.P.** w/30" Biesemeyer T-Square Fence $1399.00*
36-820 **3H.P.** w/52" Uni-fence (Special Edition)...$1499.00*
36-821 **3H.P.** w/50" Biesemeyer 52" T-Square Fence $1499.00*
34-445Z **Contractors Saw** w/30" Uni-fence and $200 in accessories FREE $785.00*
34-182 **Tenoning Jig** $85.90
11-990 **5SP Drill Press** $192.00
14-650P **1/2 H.P. Hollow Chisel Mortiser** SUPER BONUS: w/ 4 Free Delta Mortise Chisels & Bits (1/4",5/16",3/8",1/2") $248.00
50-840P **1 HP 650 CFM Dust Collector** Includes Over $27.00 Value Free •FREE 1-Delta 4' x 10' Dust Hose •FREE 1-Delta Alum. Blast Gates •FREE 2-Delta 4" Hose Clamps
SUPER BONUS BUY!
TOTAL PACKAGE ONLY $229.90
50-850P **1-1/2 HP 1200 CFM Dust Collector** Includes Over $42.00 Value Free •FREE 1-Delta 4' x 10' Dust Hose •FREE 1-Delta Alum. Blast Gates •FREE 4-Delta 4" Hose Clamps
SUPER BONUS BUY!
TOTAL PACKAGE ONLY $282.90
★ Price After Delta Rebate
50-851 **2HP 1200 CFM Dust Collector** $492.00
36-865 **Versa-Feeder** $239.00
22-675Y **15" Planer** with FREE 50-655 stand (a $260.55 value) $1065.00*
28-275 **14" Open Band-Saw** $497.90*
28-280 **14" Enclosed Band Saw 1 HP** $679.00*
28-280Z **14" Closed B/S** w/$225 accys FREE .$779.00*
31-780XP **OS Sander** Super Bonus Buy: Includes Sanding Spindle Set, PLUS Free Abrasive Rubber Cleaning Stick & Delta T-Shirt ($89 value) $214.95
36-235 **12" Compound Miter Saw** $308.00
40-650 **Q-3 18" Scroll Saw** $398.90
37-190 **6" Deluxe Jointer** $379.00*
37-350A **8" Jointer** w/stand $1337.90*
43-379 **Special Edition Shaper** $1335.00
43-505 **Router/Shaper** $299.95
50-345 **Universal Mobile Base** $48.40
31-280 **Sanding Center** $749.00*

BIESEMEYER

78-900 **50" Right 12" Left Fence System**.....$339.00

17-900P **16-1/2" Floor Drill Press** *BONUS BUY:* Includes Delta 17-920 Mortising attachment & 4 chisels in case (a $68.00 value) $364.00
17-900 **16-1/2" Floor Drill Press** $344.00

New! DELTA New!

NEW! *36-920* **Grand Edition White Uni-Saw** 52" Uni-Fence w/ White legs and Extra Cast Iron Wing on Right Side. Includes White Table and Shelf Board - 50T Ind.Carbide Blade. Personalized Insignia Plaque $1599.00*
NEW! *36-455* **Grand Edition White Contractor's Saw** Left Cast Iron Wing, White 30" Uni-Fence. White Laminated Table Board and Legs. Pro 50T Carbide Blade $785.00*
NEW! *28-270* **Grand Edition White Band Saw** Includes Enclosed Stand, 18" White Rip Fence, Mobile Base and Cool Blocks $788.00*
36-820L **Left Tilt UniSaw 3HP** $1499.00*
36-821L **Left Tilt UniSaw** Beismeyer Fence ... $1499.00*
23-710 **Sharpening Center** $148.90
31-460 **4x6 Belt/Disc Sander** $117.90
31-695 **6x9 Belt/Disc Sander** $293.90
★ Price After Delta Rebate

JDS COMPANY
NEW! *JDS 750* **750 CFM Filtration System** $255.00
JDS 8-12 **1570 CFM Filtration System.** ..$488.00

DELTA

NEW! *50-860* **1/5 H.P. Air Cleaner** comes with rubber feet. Set on floor or hang from ceiling (hardware included), 850 CFM. .$237.90

DEWALT

DW733 **12-1/2" Planer with extra set of knives** $397.90
DW788 **Scroll Saw** with FREE stand (a $79 value) $449.00
DW 708 **12" Compound Sliding Miter Saw** $644.00
DW 744 **10" Table Saw** $499.00
DW 682K **Biscuit Joiner** with FREE 100 Biscuits (*8 value) .$168.90
DW421 **Sander** $69.95
DW 423 **5" EVS R/O Sander w/H&L & Dust Collector** $82.50
DW 991KS-2 **14.4V Combo Drill & Saw Kit w/case** ... $329.00
DW 364 **7-1/4 Circular Saw with Brake** $149.90
DW 378G **15A Framer Saw with Carbide Blade** $166.90
DW-4K **4 Piece Fat Boy Combo Kit BONUS: Free Dewalt Leather Holster ($29.00 value)** Includes: Recp. Saw, circ. saw, hammer drill/driver, flex flashlight, charger & case. $565.00
DW625 **VS Electronic 3HP Plunge Router** BONUS: Free Fine Depth Adj. (a $25.00 value) $275.00
DW621 **2HP VS Plunge Router** BONUS: Free Fine Depth Adj. (A $20.00 value) $197.50
DW995KS-2 **18V Combo Drill & Saw Kit w/case.** .. $377.00
DW321K **5.8A Jig Saw Kit** $162.00
DW972K-2P **12V Cordless Drill w/ 2 Batt.** BONUS: Free flashlight $188.95
DW991K-2P **14V Cordless Drill with 2 Batteries** BONUS: Free flashlight. $208.95

QUICK-GRIP

AMT 53006 4-1/2" Micro $7.50
AMT 00506 6" Bar Clamp... $12.95
AMT 00512 **12" Bar Clamp** .. $15.45
AMT 00518 **18" Bar Clamp** .. $16.70
AMT 00524 **24" Bar Clamp** .. $17.95
AMT 00536 **36" Bar Clamp** .. $20.55
AMT 550 **50" Bar Clamp** $24.65

ARROW NAIL and STAPLE TOOLS

ARY 241-626 **Contractors Combo Kit** #0241S **18 Ga Brad Nailer** 3/8-1/-9/16" capacity and *#0626S* **18 Ga Stapler** 1/2-1" capacity
INCLUDES: 200 brads, 200 staples, oil, wrenches & case
SALE PRICE $119.90

WOODSTOCK INTERNATIONAL

W1099 **12" Dovetail Jig** includes 1/2" template $57.90
W1096 **7/16" Template** $11.15
W1098 **9/16" Template** $11.05

DAREX

DRILL DOCTOR
Sharpen drills almost as easily you sharpen pencils.
3/32"-1/2" & 1/2"-3/4" Chucks
3/32"-1/2" Chuck *#DRX 500SP.* ...$119.95
#DRX 750SP ..... $155.90 *U.S. Made*

Makita

LS1211 **12" Compound Miter Saw** ...$597.00
3901 **Plate Joiner** w/ Free100Biscuits ($8 Value) $166.00
3612C **3HP Plunge Router with Brake**...$246.90
9820-2 **Blade Sharpener** $229.90
GEO600 **Die Grinder** $85.95
6222DWLE **9.6V Crdls Drill, 2 Batt. & Flashlight** ..$117.95
6213DWAE **12V Cordless Drill Kit** $169.00
6233DWAE **14.4 Cordless Drill Kit** $183.00

Milwaukee

MLW 6496-6 **10" Slide Compound Saw** $564.50
MLW 6266-6 **Orbit Action Jig Saw** $158.00
MLW 0234-6 **1/2" Electric Magnum Drill** $133.00
MLW 0235-6 **1/2" Electric Magnum Drill (Keyless)** $133.00
MLW 6546-6 **Cdls. Screwdriver Kit** $88.50
MLW 0380-1 **3/8" Close Qtr. Screw Drill** $169.00

STOCK YOUR SHOP!™

Request Our Catalog & Shop Online at: *ai-supply.com*

Circle No. 1

WOOD ANECDOTE

Print this article

BALSAM FIR

The Christmas tree's Christmas tree

The Christmas tree tradition was brought to America by German mercenary soldiers during the Revolutionary War (1775-1783). But it wasn't until 1851 that the first retail lot to sell balsam fir Christmas trees from the Catskills was set up in New York City.

Today, over 37 million U.S. families celebrate the holidays with the presence of a real evergreen tree. And according to figures of the National Christmas Tree Growers Association, the balsam fir still ranks as the favorite.

Balsam fir (*Abies balsamea*) grows from Alberta to Newfoundland and south across the Lake States into Pennsylvania. In the wild, the tree can grow to 90' tall with a 20" diameter in 150 years. On Christmas tree farms, though, it takes about 10 years for a balsam fir to reach an average market height of 6-7'.

Why has the balsam fir proved so popular? Scotch pine, Douglas fir, Fraser fir, and noble fir have their following, but only the balsam fir is naturally symmetrical, with dense branches and a straight stem ending in a spire perfect for decoration. Its long-lasting, dark-green needles retain their pleasing fragrance indoors. In fact, North Woods' campers ensured a pleasant night's sleep with the aromatic boughs as pillow stuffing.

Unfortunately, the wood of balsam fir lacks the reputation of this favorite holiday tree. The soft and brittle stock primarily becomes paper, although some is used for light construction, interior paneling, and crates.

The first U.S. Christmas tree lot was in New York City in 1851. It sold balsam firs from the Catskill Mountains.

The Joy of Sanding

Right!? Who would believe a job as tedious and dusty as sanding could be a joy?

Thousands of Performax owners do. With their Performax® drum sander... no more sawdust in their faces, no more high and low spots on their finished pieces.

Imagine the satisfaction of sanding a wide surface (up to 32") to within .010" uniform thickness across its full width. Or sanding stock as short as 2 1/4" without a carrier board or scuffed up fingers. Fantasize sanding to as smooth a surface as you wish without any elbow grease.

Make your woodworking the pleasure it was meant to be. Call us today for a free brochure and the dealer nearest you.

PERFORMAX PRODUCTS, INC.

12257 Nicollet Ave. So.
Burnsville, MN 55337
1-800-334-4910 Fax (612) 895-5485

NEW - READY-TO-WRAP ABRASIVES

Circle No. 78

Econ-Abrasives

WE MAKE ABRASIVE BELTS ANY SIZE, ANY GRIT!

Standard Abrasive Sheets

CABINET PAPER

	50/pk	100/pk
60D	$16.70	$30.00C
80D	15.60	27.80C
100 thru 150C	14.50	25.60C

FINISHING PAPER

80A	$ 11.15	$18.90C
100 thru 280A	10.00	16.70C

NO LOAD PAPER(white)

100 thru 400A	$12.25	$21.25C

"C" = 100 SHEETS

Velcro® Vacuum Discs
8 Hole pattern for Bosch sanders

Dia.	Grit	Price
5"	60	$ .48ea
5"	80	.46
5"	100 thru 320	.45

✱ *Available in 5 hole pattern* ✱

ABRASIVE BELTS

Belts are resin bond cloth with a bi-directional splice, specify grits.

1X30	$ .81 ea	3X24	$ .93 ea
1X42	.81 ea	3X27	.96 ea
1X44	.81 ea	4X21 3/4	1.06 ea
2 1/2X16	.85 ea	4X24	1.10 ea
3X18	.86 ea	4X36	1.35 ea
3X21	.90 ea	6X48	3.50 ea
3X23 3/4	.93 ea	6x89	6.24 ea

OTHER SIZES ON REQUEST

HEAVY DUTY SPRING CLAMPS

Clamps come w/PVC tips and grips.

Size	Price
4"	$1.75 ea
6"	2.25
8"	3.50

JUMBO ROUTER PAD(24" x 36")

It will not allow small blocks of wood to slip out under router or sanding applications. ROUTER PAD ONLY $8.95ea.

JUMBO BELT CLEANING STICK ONLY $8.80

*Wide Belts*Rolls*Flap Wheels
*Pump Sleeves*PSA Discs
*Router & Wood Bits*Wood Glue

*MasterCard, VISA, C.O.D. or Check
*SATISFACTION GUARANTEED!!!
*CALL FOR *FREE* CATALOG
- TX & NV add appropriate sales tax
- Continental U. S. shipping add $5.50

Econ-Abrasives
P. O. Box W1628
Frisco, TX 75034
(972)377-9779

TOLL-FREE ORDERING LINE (800)367-4101

Circle No. 1229

ORDER 1-800-328-0457 MAIL ORDER HOURS M-F 7:00-5:30 C.S.T. SAT 8:00-1:00

DELTA TOOLS

Model	Description	List	Sale
50-860	NEW 850 CFM Air Cleaner	Sale	239
31-695	6" Belt/9" Disc Sander	441	299
23-710	Sharpening Center	217	145
23-680	6" Bench Grinder 1/4 HP	80	69
31-460	4" Belt/Disc Sander	198	119
40-560	16" 2 speed Scroll Saw	230	129
40-540	16" var/spd Scroll Saw	249	179
11-990	12" Bench Drill Press	255	184
11-090	32" Radial Bench Drill Press	405	279
43-505	1/2" Bench Router/Shaper	398	269
22-540	12" Bench Top Planer	Sale	259
28-195	10" Band Saw	390	309
22-560	12-1/2" Planer w/ extra knives		329
36-865	Versa Feeder Stock Feeder		249
36-220	10" Compound Mitre Saw	294	199
28-185	Bench Band Saw	213	168
36-240	10" Sliding Mitre Saw	589	439
37-070	6" v/spd Bench Jointer	351	265
14-650	Hollow Chisel Mortiser	380	239
17-900	16-1/2" Floor Drill Press	490	349
36-285	8-1/4" Builders Saw w/ stand	Sale	268
34-555	Sliding Table	487	289
36-250	10" Slide Compound Saw	825	449
31-780	Oscillating Spindle Sander	253	194
31-780K	31-780 w/ 31-781 spindle set		209
46-700	12" Wood Lathe	575	465
40-650	Q3 18" Scroll Saw	Sale	389
36-905	30" Unifence	346	255
36-906	50" Unifence	444	325
34-444	10" Contractors Table Saw	Sale	579

The following tools have a $50.00 rebate ! Price shown is before rebate.

36-455	10" Contractors Table Saw w/ 30" unifence, cast iron wing, 34-914 table board, & carbide blade	Sale	639
22-675	DC380 15" Planer	Sale	1175
28-275	14" Band Saw 3/4 HP	Sale	595
28-280	14" Band Saw 1 HP motor with enclosed stand	Sale	739
28-270	14" Band Saw 1 HP w/ 50-274 mobile base, 28-855 rip fence, & 28-266 cool blocks	Sale	839
31-280	Sanding Center w/ stand	Sale	789
37-190	6" Deluxe Jointer	603	445

NEW Single Stage Dust Collectors

50-850	1-1/2 HP, 1200 CFM	Sale	285
50-851	2 HP, 1500 CFM	Sale	455

MILWAUKEE TOOLS

6527	NEW Sawzall with case	343	169
6537-2	6527 w/quick lok blade change	224	175
0407-22	12V Drill w/kyls chuck&2 batt	380	175
0224-1	3/8" Drill 4.5 amp magnum	236	132
0234-6	1/2" Drill 4.5A mag 0-850 rpm	255	134
0235-1	1/2" Drill w/keyless chuck	255	142
0244-1	1/2" Drill 4.5A mag 0-600 rpm	255	134
0222-1	3/8" Drill 3.5 amp 0-1000 rpm	213	119
0228-6	3/8" Drill 3.5 amp 0-1000 rpm	207	109
0375-1	3/8" close quarter Drill	255	148
0379-1	1/2" close quarter Drill	288	165
6546-6	Screwdriver 200 & 400 rpm	150	89
6547-6	6546-6 w/bits,1/4" chuck & cs	185	108
5399	1/2" D-hdle Hammer Drill Kit	356	219
5397-1	3.8" v/ spd Hammer Drill Kit	275	145
5371-6	1/2" v/ spd Hammer Drill Kit	360	194
3107-6	1/2" v/spd right angle Drill Kit	411	234
3300-1	1/2" v/ spd right angle Drill	378	219
6142	4-1/2" Grinder w/cse & acc	224	129
6490-6	10" Mitre Saw	496	265
6491	6490 w/ carbide blade & bag	594	328
6494-6	10" Compound Mitre Saw	585	315
6266-6	Top Handle Jig Saw	315	159
6496-6	10" Slide Compound Saw	1050	569

FREUD CARBIDE TIPPED SAW BLADES 5/8" Bore - Industrial Grade

Item	Description	Teeth	List	Sale
LU72M010	Gen Pur. A.T.B.	10" 40	69	42
LU82M010	Cut-off	10" 60	93	44
LU84M011	Comb	10" 50	78	45
LU85M010	Super Cut-off	10" 80	115	59
LM72M010	Ripping	10" 24	69	38
LU73M010	Cut off	10" 60	84	49
LU87M010	Thin Kerf	10" 24	72	45
LU88M010	Thin Kerf	10" 60	88	49
LU98M010	Ultimate	10" 80	128	68
LU91M010	Compnd Mitre	10" 60	88	54
F410	Quiet Blade	10" 40	95	49
SD308	8" Dado - Carbide		230	119
SD508	8" carbide w/case & shims		344	168
FB100	16 piece Forstner Bit Set		338	194
94-100	5 pc. Router Bit Door System		320	169
FT2000E	Plunge Router		Sale	189
JS102	Biscuit Jointer		Sale	119

HITACHI TOOLS

C8FB2	8-1/2" Slide Compound Saw	1169	449
C10FS	10" Slide Compound Saw	1627	579
C15FB	15" Mitre Saw	1346	645
NV45AB	Coil Roofing Nailer	935	379
NT32AE	NEW Pinner 5/8" - 1-1/4"	Sale	85
NT50AE	NEW Pinner 3/4" - 2"	Sale	129
C10RA	NEW 10" Table Saw	632	319

MAKITA TOOLS

Model	Description	List	Sale
5090DW	3-3/8" Saw Kit 9.6 volt	280	155
DA391D	3/8 angle Drill 9.6V	166	114
DA391DW	3/8" angle Drill Kit 9.6V	341	189
ML902	Incandescent Flashlight 9.6V		14.95

6095DWE	9.6 volt Drill Kit w/2 batt	Sale	125
6095DWLE2	6095DWE w/flashlight	Sale	139
632007-4	9.6 volt Battery	47	30
632002-4	7.2 volt Battery	39	28

NEW 18 VOLT MAKITA TOOLS

6343DWAE	1/2" Drill Kit	Sale	249
5620DWA	6-1/2" Circular Saw Kit	Sale	259

CORDLESS DRILLS WITH 2.0 AMP HIGH CAPACITY BATTERIES

6213DWAE	12V 3/8" Drill Kit	325	169
6233DWAE	14.4V 3/8" Drill Kit	358	205

9900B	3"x21" Belt Sander w/bag	347	179
9924DB	3"x24" Belt Sander w/bag	360	189
N1900B	3-1/4" Planer with case	263	142
1912B	4-3/8" Planer	352	205
N9514B	4" Disc Grinder 4.6 amp	118	65
DA3000R	3/8" Angle Drill	355	185
2708W	8-1/4" Table Saw	637	295
6405	3/8" Drill Rev. 0-2100 rpm	115	65
6013BR	1/2" Drill Rev. 6 amp	270	159
9401	4" x 24" Belt Sander w/bag	458	235
5007NBK	7-1/4" Circ Saw w/ case	250	125
LS1011	10" Slide Compound Saw	995	429
LS1211	12" Slide Compound Saw	1620	695
3901	Plate Joiner Kit	376	209
3612C	3 HP Plunge Router	492	269
LS1040	10" Compound Miter Saw	460	259
LS1013	10" Dual Compound Slide Miter Saw	1088	599
BO5010	5" Random Orbit Sander	142	72
LS1220	NEW 12" Compound Miter Saw		379
9227C	NEW 7/9" Polisher	350	195
SJ401	NEW 16" Bench Scroll Saw	300	175
2702	NEW 8-1/4" Table Saw	Sale	299
2703	NEW 10" Table Saw	Sale	319

SENCO AIR NAILERS

SFN1+	Finishing Nailer 1 - 2" w/ cs	448	299
SN325	Nailer 1-7/8 - 3-1/4"	665	365
SLP20	Pinner w/cs 5/8 -1-5/8"	422	229
SKS	Stapler 5/8 - 1-1/2"	390	279
SN70	Framing -Clip Hd 2 - 3-1/2"	725	449
SN65	Framing -Full Hd 2 - 3-1/2"	709	379
SN600	NEW Framing 2 - 3-1/2"	699	369
SFN40	Finish Nailer 1-1/4 - 2-1/2"	569	349

NEW Accuset Nailers by SENCO

A100LS	Finish Stapler 1/2" - 1"	160	119
A150LS	Finish Stapler 1/2" - 1-1/2"	220	149
A125BN	Brad Nailer 5/8" - 1-1/4"	160	99
A200BN	Brad Nailer 5/8" - 2"	215	139

BOSTITCH AIR NAILERS

Model	Description	List	Sale
N80S-1	Stick Nailer	Super Sale	325
RN45	Coil Roof Nailer 3/4 - 1-3/4	845	359
N60FN-2K	Finishing Nailer w/ case	557	275
BT35-2K	Brad Tacker 5/8" - 1-3/8" with case, oil, & brads	279	125
MIIIFS	Flooring Stapler 15 gauge	902	529
S32SX-1K	Finish Stapler-1/2" - 1-3/8" with case & oil	269	145

JORGENSEN ADJUSTABLE HANDSCREWS

Item#	Jaw Length	Opening Capacity	List	Sale	Box of 6
#0	6"	4-1/2"	20.35	12.10	66.95
#1	10"	6"	23.30	12.90	71.95
#2	12"	8-1/2"	26.75	14.90	83.95
#3	14"	10"	33.85	18.55	105.75

PONY CLAMP FIXTURES

Model	Description	List	Sale	Lots of 12
50	3/4" Black Pipe	15.45	8.50	92.50
52	1/2" Black Pipe	12.65	6.95	74.95

PANASONIC CORDLESS

EY6100FQKW	12V 3/8" Drill kit w/ 2 Ironman batteries, 15 min. charger, & case	379	179
EY6101FQKW	12V 1/2" Drill w/ 2 Ironman batteries, 15 min. charger, & case	324	199
EY6230FQKW	NEW 15.6V Drill Kit with 2 Ironman batteries, 30 minute charger & case	425	209
EY3503FQWKW	5-3/8" 12V Wood Cutting Circular Saw Kit	500	259

BIESEMEYER FENCES

B-50	50" Commer. Saw	443	325
T-SQUARE 52	52" Homeshop	360	275
T-SQUARE 40	40" Homeshop	335	255
T-SQUARE 28	28" Homeshop	325	245

AIRY AIR NAILERS

Model	Description	List	Sale
0241SK	Brad Nailer 3/8" - 1-9/16"	180	98
0626SK	1/4" Crown Stapler 3/8" - 1"	194	98

Above nailers come w/case, fasteners, oil & wrenches

0241/0626
0241 Brad Nailer, 0626 Stapler, case, fasteners, oil, & wrenches
Super Sale 129.95

STABILA LEVELS

25010	10" die cast Torpedo Level	43	29
24640	24" Level w/ hand holes	62.20	43
24670	48" Level w/ hand holes	79.70	58

1998 TOOL CATALOG AVAILABLE
Call Toll-Free 1-800-328-0457 In Minn. Call (612)224-4859
FAX: (612)224-8263 • www.7cornershdwe.com
CHECK • MONEY ORDER • VISA • MASTERCARD • DISCOVER
SEVEN CORNERS ACE HDW. Inc.
216 West 7th St. • St. Paul, MN 55102 • Est. 1933

We are one of the last mail order companies to provide *FREE FREIGHT !*

Order with confidence from Tools On Sale™.

There are no hidden charges.

Circle No. 92

TOOLS ON SALE™
AMERICA'S LOWEST PRICED TOOLS
FREE FREIGHT TO THE
48 CONTINENTAL STATES ON EVERY ITEM
PRICES SUBJECT TO CHANGE WITHOUT NOTICE

DEWALT TOOLS

Model	Description	List	Sale
DW309K	NEW Recipro Saw 10 amp	318	169
DW378G	NEW 7-1/4" Framer's Saw	210	169
DW222	3/8" Drill, 0-1200 rpm	184	99
DW231	1/2" Drill, 0-850 rpm, 7.0 amp	240	129
DW236	1/2" Drill, 0-850 rpm, 7.8 amp with keyless chuck	264	149
DW124K	1/2" right angle Drill	590	329
DW321K	Top Handle Jigsaw Kit	300	164
DW364	7-1/4" Circ. Saw w/brake	294	162
DW610	1-1/2 HP 2 handle Router	266	149
DW411K	1/4 sheet Palm Sander w/ cse	88	58
DW682K	Biscuit Joiner with case	448	169
DW705	12" Compound Mitre Saw	734	359
DW621	2 HP Plunge Router	400	218

DW621 comes with Free DW6956 fine height adjuster !

DW675K	3-1/8" Planer with case	292	164
DW677K	3-1/4" Planer w/ case	268	155
DW431	3 x 21 v/spd Belt Sander	338	188
DW421	5" Palm Ran. Orb Sander	144	74
DW423	Palmgrip Random Orbit Sander - variable speed	170	94

DW421 & DW423 come with Free DW4317 case !

DW673K	Laminate Trimmer Kit	364	188
DW272	Drywall Gun, 0-4000, 6.3 amp	160	95
DW276	Drywall Gun, 0-2500, 6.5 amp	160	95
DW935K	14.4V 5-3/8" Trim Saw Kit	444	237

DEWALT CORDLESS DRILLS

DW952K-2	3/8" v/spd w/ two 9.6V XR batteries	284	129
DW972K-2	3/8" variable speed w/ two 12V XR batteries	362	182
DW972KQ-2	Above drill kit with 15 minute charger	Sale	229
DW991K-2	3/8" variable speed w/ two 14.4V XR batteries	415	209
DW991KQ-2	Above drill kit with 15 minute charger	Sale	245
DW994KQ	1/2" variable speed w/ one 14.4V XR batteries	458	239

Above drill kits come w/ charger & steel case !

DW991KS-2	DW991K drill, DW935 trim saw, 2 XR batteries & case	Sale	345

DEWALT 18 VOLT CORDLESS TOOLS

DW938K	Recipro Saw Kit	520	269
DW995K	1/2" Drill Kit w/ 1 battery	428	229
DW995K-2	1/2" Drill Kit w/ 2 batt	Sale	249
DW997K	1/2" Drill/Hammer Drill Kit	454	249
DW936K	5-3/8" Saw Kit	458	249
DW995KS-2	DW995K Drill, DW936 Saw and case	Sale	385
DW991KC-2	DW991K 14.4V drill kit, DW937 14.4V recipro saw,& case		375
DW995KC-2	DW995K 18V drill kit, DW938 18V recipro saw, & case		395
DW997KC-2	DW997K 18V drill kit, DW938 18V recipro saw, & case		415

DEWALT BENCH TOP TOOLS

DW708	12" Dual Compound Slide Mitre Saw	Sale	649
DW788	20" Scroll Saw	Sale	469
DW733	12" Planer w/ extra blades	Sale	435
DW744	10" Portable Table Saw	Sale	499
DW756	NEW 6" Bench Grinder	164	75
DW758	NEW 8" Bench Grinder	184	115

BOSCH

Model	Description	List	Sale
1587VS	Top Handle "CLIC" Jig Saw	292	139
1587AVSC	1587VS Saw Kit with case and *New* Progressor blades	Sale	149
1584VS	Barrel "CLIC" Jig Saw	288	139

Bosch Metal Case for above Jig Saws ... 24
Bosch 30 blade assortment for Jig Saws 29.99

1584VS or 1587VS
with steel case and 30 Bosch blades Sale 175

1295DH	5" Random Orb Palm Sndr	145	89
1274DVS	3"x21" v/spd Belt Sander	301	175
1276VSK	1-1/2"x12" Belt Sander	218	129
1275DVS	3"x24" v/s Belt Sndr	379	214
1276DVS	4"x24" v/s Belt Sndr	408	229
1194VSR	1/2" v/ spd Hammer Drill	272	155
1194VSRK	above Drill w/ case	303	169
1604A	1-3/4 HP 2 Handle Router	269	142
1613EVS	2HP v/s Plunge Router	369	199
1615EVS	3 HP v/s Plunge Router	536	305
1634VSK	Recip Saw 10.5 amp	335	185
3315K	12V T-handle Drill Kit	345	159
3615K	14.4V Drill Kit	354	174
3107DVS	5" Random Orbit Sander	165	98
3107DVSK	3107DVS with case	195	115
3725DVS	5" Random Orbit Sander	256	145
3727DVS	6" Random Orbit Sander	266	149
B3915	10" Slide Compound Saw	1050	559
3912	NEW 12" Compound Mitre Saw	638	359
11224VSR	7/8" SDS Rotary Drill	404	229
1703AEVS	5" Grinder - 8.5 amp	245	139

Introducing the NEW Bosch Routers

1617	1-3/4 HP Router - 2 handle	Sale	169
1617EVS	2 HP Router w/ variable speed - 2 handle	Sale	189
1618	1-3/4 HP Router - "D" handle	Sale	179

JDS AIRTECH AIR CLEANERS

Model	Description	List	Sale
350	12"x24"x28" 1/5 hp - 350 CFM		249
8-12	20"x24"x44" 1/3 hp 800 & 1200 CFM		479

RYOBI SPECIALS

RE600	3 HP Plunge Router v/spd	500	235
BE321	3" x 21" v/spd Belt Sander	310	139

Above sander comes with sanding frame

WDS1600	16" x 32" Drum Sander	980	569

Above sander comes with stand

JM80K	Plate Jointer with case	218	99

JET TOOLS

JJ60S	6" Jointer - open stand	Sale	429
JJ6CSX	6" Jointer - closed stand	Sale	489
JJ8CS	8" Jointer - closed stand	Sale	1169
JWP124P	12" Benchtop Planer	Sale	339
JWBS14OS	14" Band Saw 3/4 HP - open stand	Sale	499
JWBS14CS	14" Band Saw 1 HP - closed stand, rip fence & mitre gauge	Sale	545
JWTS10JF	10" Contractor Table Saw with 30" Jet fence 1-1/2 HP	Sale	599
JWTS10CWPF	10" Contractor Table Saw with 30" Exacta fence 1-1/2 HP	Sale	749
JTAS10X501	10" Tilting Arbor 3 HP Table Saw with 50" Exacta fence, table board & legs	Sale	1399
JDP17MF	16-1/2" Drill Press 3/4 HP - 16 speed. Comes with mortise attachment & bit set	Sale	449
DC-650	Dust Collector, 1 HP, 650 CFM	319	219
JWP-15HO	15" Planer with stand	1699	1229

PORTER CABLE

9444	Profile Sander Kit	220	99
9444VS	Var/spd Profile Sander Kit	207	115
690	1-1/2 HP Router 8 amp	278	149
6931	Plunge Router Base	139	82
693PK	690 and 6931 plus case	Sale	199
9690	690 Router with case	Sale	169
691	1-1/2 HP Router D-handle	303	164
693	1-1/2 HP Plunge Router Base	338	184
697	1-1/2 HP Router/Shaper	418	235
698	Heavy Duty Shaper Table	238	135
352VS	3x21 v/s Belt Sander w/bag	321	175
9352VS	Above sander with case	Sale	189
360	3"x24" Belt Sander w/ bag	397	214
360VS	360 Sander w/ variable speed	429	229
362	4"x24" Belt Sander w/ bag	412	224
362VS	362 Sander w/ variable speed	446	239
9125	3-1/4" Planer Kit w/ case	250	145
505	1/2 sheet Pad Sander	249	139
330	Speed Block Sander 1/4 sheet	120	68
556	Biscuit joiner w/5556 fence	Sale	135
557	NEW Plate Jointer with tilt fence. Includes 2" & 4" blades for use with standard & face frame plates	400	199
5563	Face frame plates for 557		7.99
7519	3-1/4 HP Router 2 Handle	469	258
7518	3-1/4 HP 5 speed Router	534	289
7539	3-1/4HP v/spd Plunge Router	534	289
7310	5.6 amp Laminate Trimmer	176	102
97310	Laminate Trimmer Kit comp	336	189
7335	5" Random Orbit Sander	254	139
97355	7335 w/ case & dust pick-up	274	149
7336	6" Random Orbit Sander	259	145
97366	7336 w/ case & dust pick-up	284	159
332	Palm Grip Rndm Orb Sander	133	59
333	above sander with dust bag	148	65
333VS	NEW Random Orbit Sander - variable speed	150	79
334	333 Sander with PSA pad	148	65
335	Palmgrip Random Orbit Sander with dual flip pad	Sale	85
310	Production Lam. Trimmer	270	154
347K	7-1/4" "Framers" Circ Saw with plastic case	250	129
743K	7-1/4" "Framers" Circ Saw with case - left hand version	250	129
9737	Tiger Recipro Saw	307	158
9543VS	NEW Top Handle Jig Saw	300	175

New Porter Cable Cordless Nailers !

CDA250	Angle Finish Nailer 1-1/4" to 2-1/2"	500	279
CFN250	Finish Nailer 1" to 2-1/2"	500	279
CMS200	Medium Crown Stapler 1" to 2"	500	279

Porter Cable Pneumatic Nailers

BN125	Brad Nailer -18 ga. 5/8"- 1-1/4"	144	89
BN200	Brad Nailer -18 ga. 3/4"-2"	238	139
FN250A	Finish Nailer -16 ga. 1"-2-1/2"	362	189
DA250A	Angle Nailer -15 ga. 1-1/4"-1-1/2"	412	235
FC350	Framing Nailer - clipped head	558	289
FR350	Framing Nailer - round head	558	289
RN175	Roofing Coil Nailer	504	289

CFBN125 BN125 nailer, CF1400 compressor and 25' air hose
Sale 269.00

Porter Cable Compressors

CF1400	1 HP, 4 gal. Pancake	Sale	195
CF1540	1-1/2 HP, 4 gallon Side Stack	Sale	295
CF2400	2 HP, 4 gal. Side Stack	Sale	319

Porter Cable Cordless Drills

9862	12V Drill Kit w/ 2 batteries	382	159
9862F	9862 Drill Kit with flashlight	Sale	169
9872	14.4V Drill Kit w/ 2 batteries	424	169

FREE FREIGHT TO THE CONTINENTAL STATES ON EVERY ITEM • GIFT CERTIFICATES NOW AVAILABLE

Print this article

All About The Christmas Tree

A bit of holiday history and tradition

- Ancient Egyptians brought palm leaves into their homes on the shortest day of the year in December (the 21st) as a symbol of life's triumph over death.
- In the Middle Ages, evergreens were hung with red apples to celebrate the feast of Adam and Eve on December 24.
- The first recorded reference to Christmas trees was in 16th-century Germany where trees were draped with colored paper, fruits, and sweets. The tradition was brought to America during the Revolutionary War by German mercenary soldiers who fought for the British.
- Franklin Pierce, the United States' 14th president, brought the Christmas tree tradition to the White House in 1855. In 1923, President Calvin Coolidge inaugurated the National Christmas Tree Lighting Ceremony on the White House lawn.

◆◆◆

We bet you didn't know that:

- This year alone, over 33 million American families will celebrate the holidays by decorating a real Christmas tree. Source: National Christmas Tree Association (NCTA), 314/205-0944.
- According to the NCTA, the top states in Christmas tree production are Oregon, Michigan, Wisconsin, Pennsylvania, California, and North Carolina.
- The United States claims about 15,000 Christmas tree growers who, in total, have approximately 1 million acres in tree production. About 100,000 people work in the Christmas tree industry.
- The NCTA claims that the top-selling trees for the holidays are balsam fir, Douglas fir, Fraser fir, noble fir, Virginia pine, and white pine.

How to select and care for a Christmas tree

- Test for freshness by gently grasping a branch between your thumb and forefinger and pulling the needles toward you. Very few needles should come off if the tree is fresh.
- Until you're ready to decorate it, keep the tree in a sheltered, unheated area to protect it from drying wind and sun.
- Choose a stand that holds a gallon or more of water (it will absorb that much or more in the first 24 hours). Before setting the tree in the stand, make a new cut across the base about ¼" above the original.
- Keep the stand filled with water. If the new cut is exposed, sap will seal it closed in 4 to 6 hours.
- To keep your tree fresh longer, shield it from fireplaces, heat ducts, and television sets.

◆◆◆

What to do with your old tree

- Because Christmas trees are biodegradable, you can turn the trunk and branches into mulch for walkways and gardens. Check with your local public works department to see if they operate a community mulching program. (And remove all tinsel from the tree before pickup.)
- Christmas trees make effective sand and soil erosion barriers on beaches and river beds. Groups, such as the Izaak Walton League, often sink trees in lakes and ponds as refuge and feeding areas for fish.
- Before recycling as described above, use the tree as a temporary yard or garden bird feeder to supplement your other feeders. Hang fruit slices, suet, and seed from the branches. Birds will come for the food and stay for the welcome new shelter.
- Save a thicker portion of the trunk to dry and later carve or turn it into a meaningful momento of a wonderful holiday season.
- NEVER burn your Christmas tree in the fireplace or a woodstove. Doing so greatly contributes to creosote buildup.

Illustrations: Brian Jensen and Jim Stevenson

Eleven new reasons to park your car in the driveway.

NEW RIDGID BENCH TOP AND STATIONARY TOOLS. YOU'LL FIND THEM ALL AT THE HOME DEPOT.

Your garage is about to get a lot smaller. Thanks to the new line of woodworking tools from Ridgid, a name professionals have trusted since 1923. Built to last, each tool has been engineered for the serious woodworker and is backed by a lifetime warranty. And, of course, at The Home Depot, you'll always find them at the guaranteed low price. Every day. So you can afford to build almost anything you want. Including, perhaps, a new place to park the family car.

RIDGID

Low prices are just the beginning.

© 1998, HOMER TLC, Inc.

NOBODY ELSE GIVES YOU A FULL LINE OF 4 DOORS STANDARD. NOBODY.

HEY, WE KNOW IT'S A FREE COUNTRY AND EVERYTHING, BUT WHY WOULD YOU WANT TO DRIVE AROUND IN THEIR 3-DOOR EXTENDED CAB WHEN FORD F-SERIES SUPERCAB GIVES YOU 4 DOORS STANDARD? 4 DOORS STANDARD FOR THE PRICE OF THEIR 3-DOOR.* 4 DOORS STANDARD FOR EASIER ACCESS. A FULL LINE OF 4-DOOR SUPERCABS. THAT'S A STANDARD NOBODY ELSE LIVES UP TO.

Ford F-Series

Built Ford Tough

1-800-258-FORD or
www.fordvehicles.com

*Based on MSRP comparison of Chevrolet and Ford base models.

Better Homes and Gardens®
WOOD® PATTERNS®
For your woodworking convenience

DECEMBER 1998 ISSUE 110

Dear Reader: As a service to you, we've included full-size patterns on this insert for irregular-shaped and intricate project parts. You can machine all other project parts using the Bill of Materials and the drawings accompanying the project you're building.

© Copyright Meredith Corporation, 1998. All rights reserved. Printed in the U.S.A.

Auburn Speedster • Salad Tongs • Multipurpose Storage Steamer Trunk • Country Chest

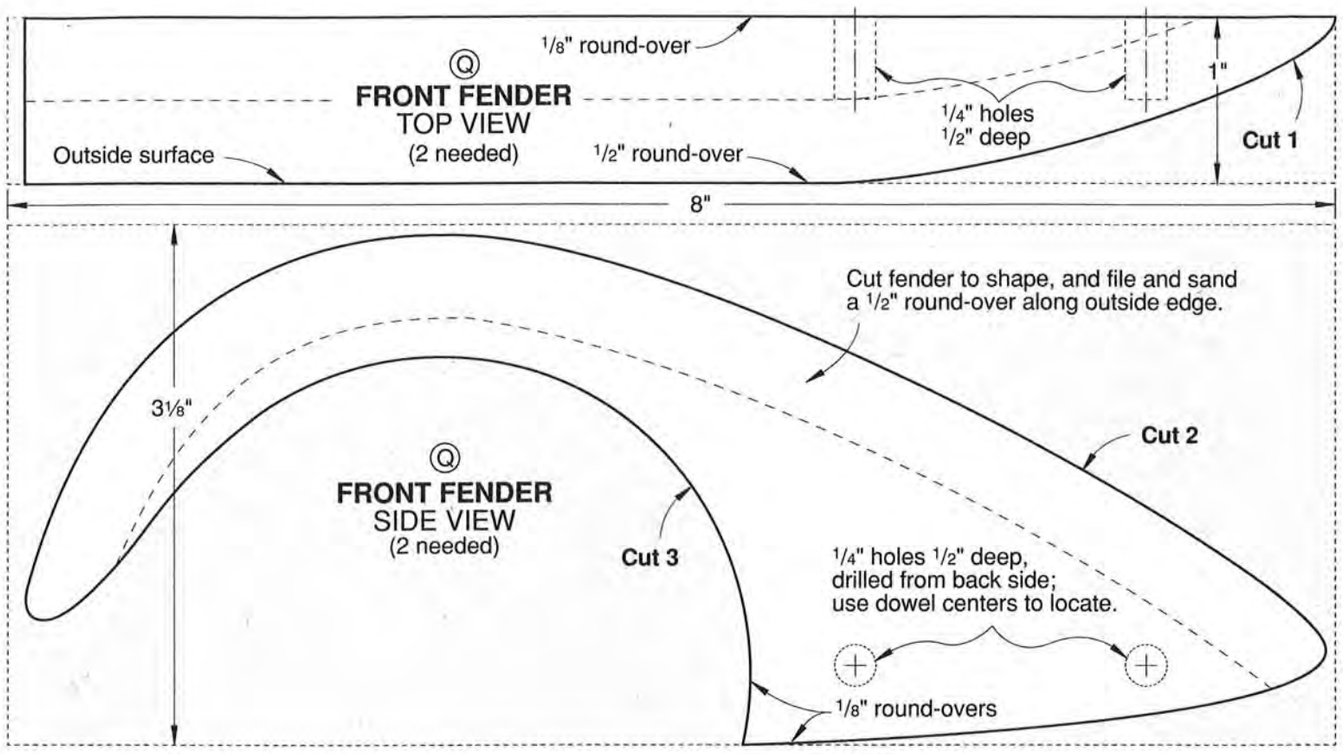
1/8" round-over
Ⓠ FRONT FENDER TOP VIEW (2 needed)
1/4" holes 1/2" deep
1"
Cut 1
Outside surface
1/2" round-over
8"
Cut fender to shape, and file and sand a 1/2" round-over along outside edge.
3 1/8"
Cut 2
Ⓠ FRONT FENDER SIDE VIEW (2 needed)
Cut 3
1/4" holes 1/2" deep, drilled from back side; use dowel centers to locate.
1/8" round-overs

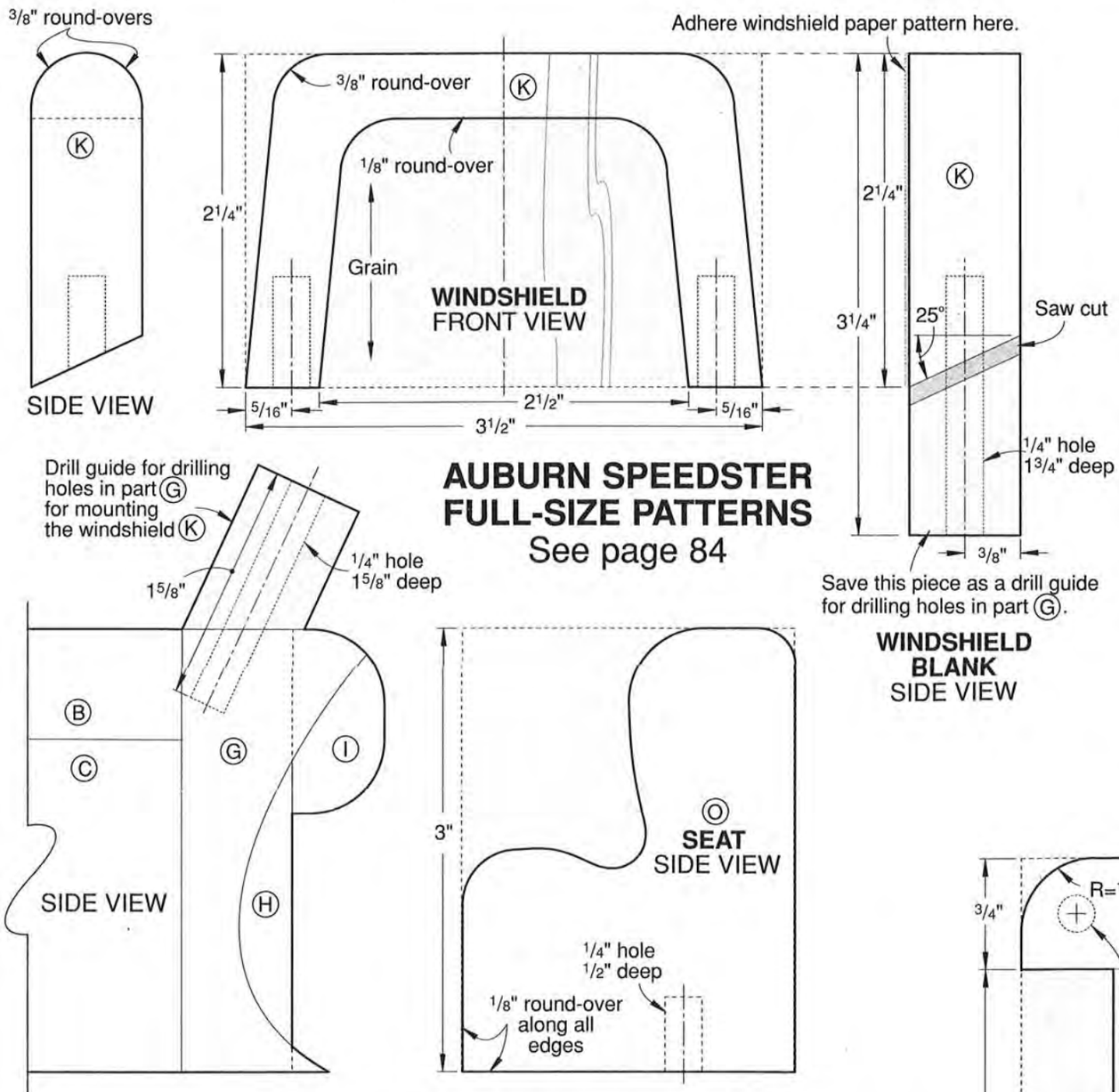

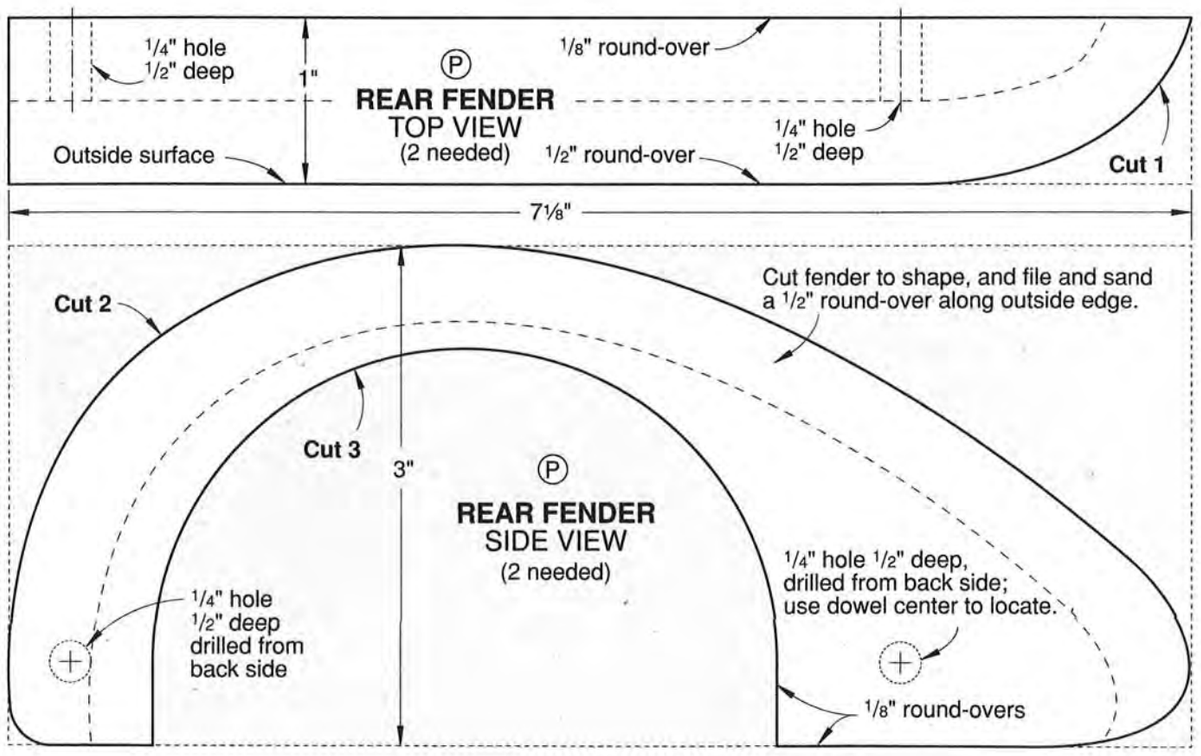
1/4" hole 1/2" deep
1"
Ⓟ REAR FENDER TOP VIEW (2 needed)
1/8" round-over
1/4" hole 1/2" deep
Outside surface
1/2" round-over
Cut 1
7 1/8"
Cut 2
Cut fender to shape, and file and sand a 1/2" round-over along outside edge.
Cut 3
3"
Ⓟ REAR FENDER SIDE VIEW (2 needed)
1/4" hole 1/2" deep drilled from back side
1/4" hole 1/2" deep, drilled from back side; use dowel center to locate.
1/8" round-overs

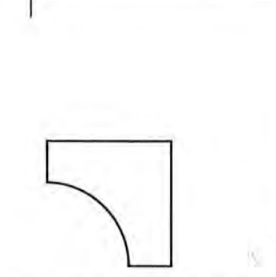

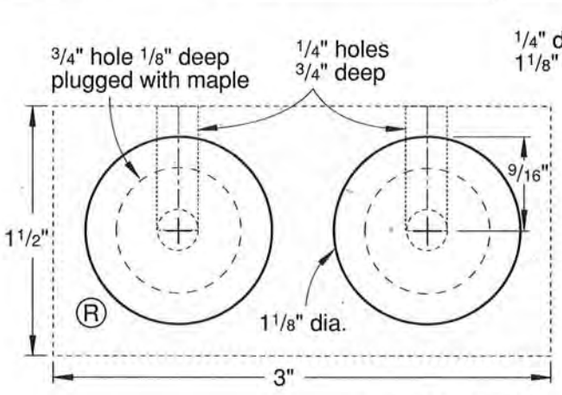

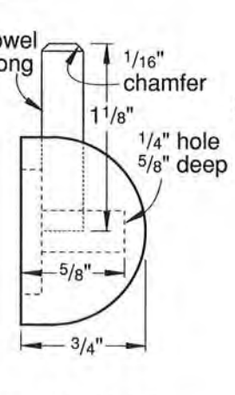

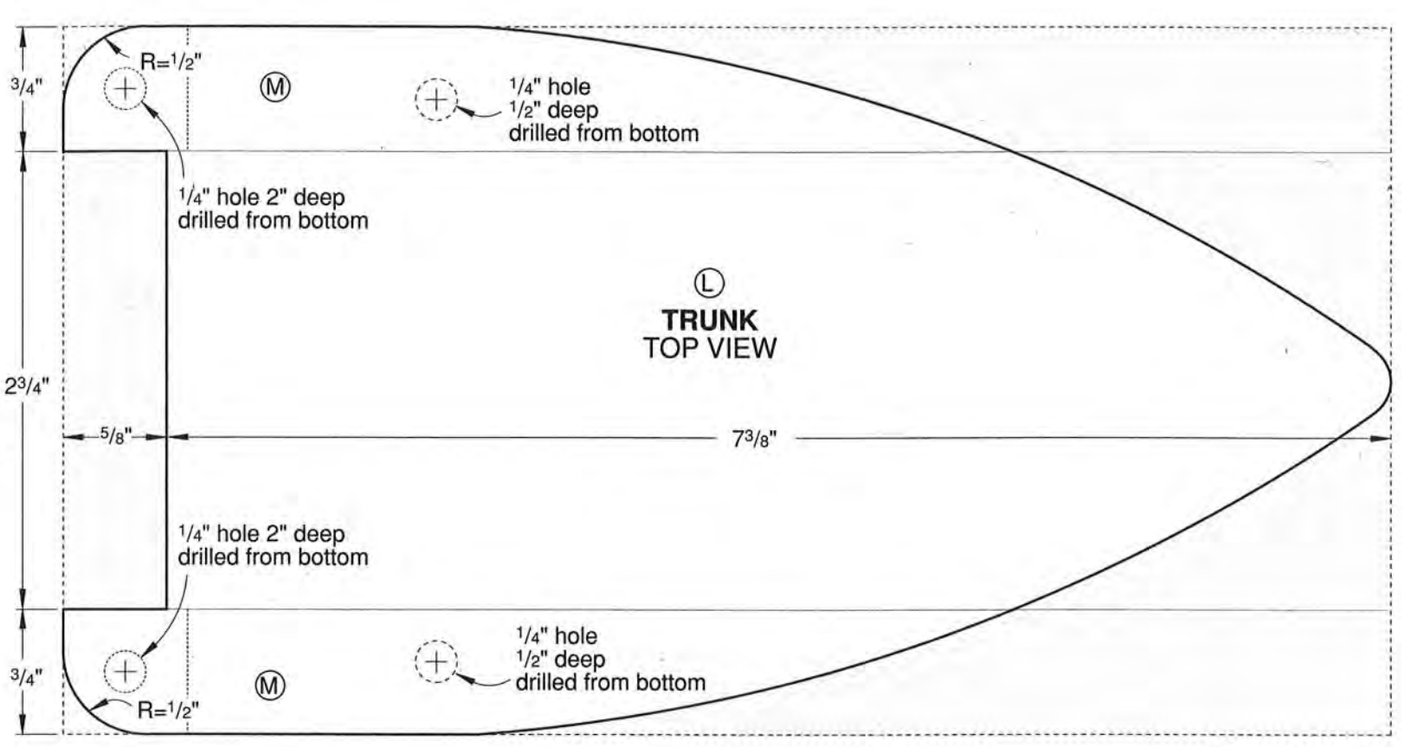

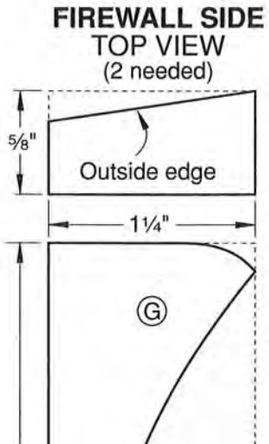

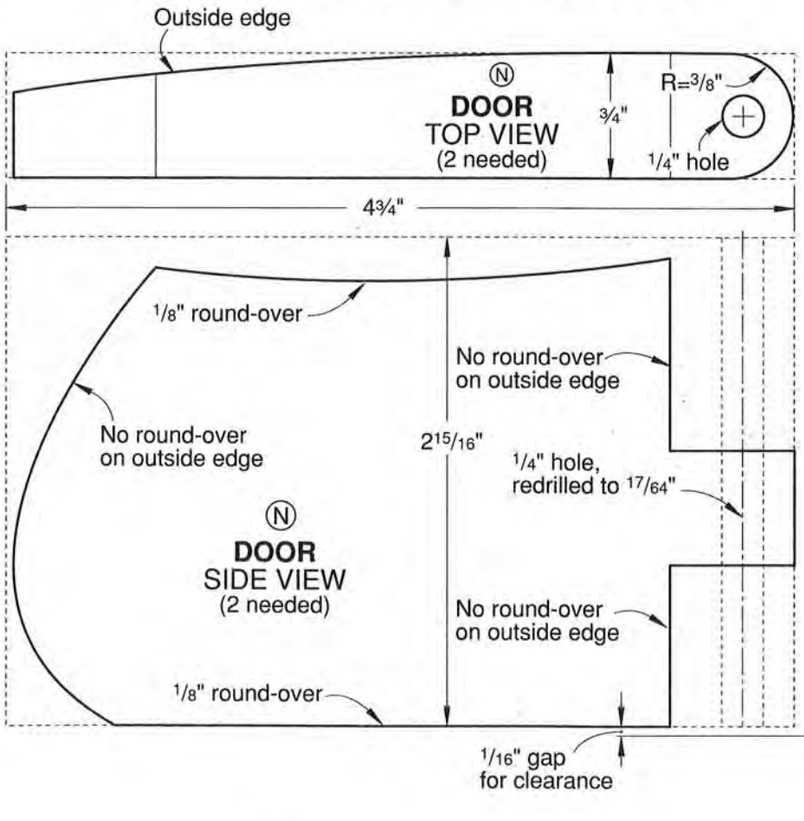

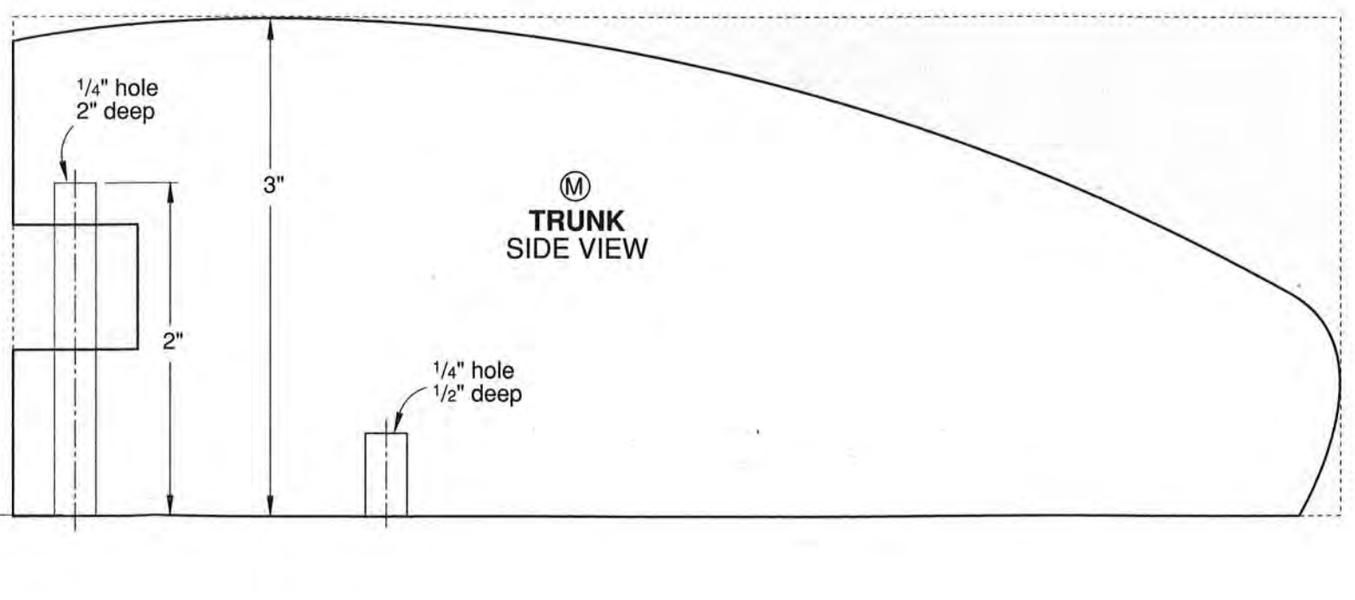

SALAD TONGS FULL-SIZE PATTERNS

See page 78

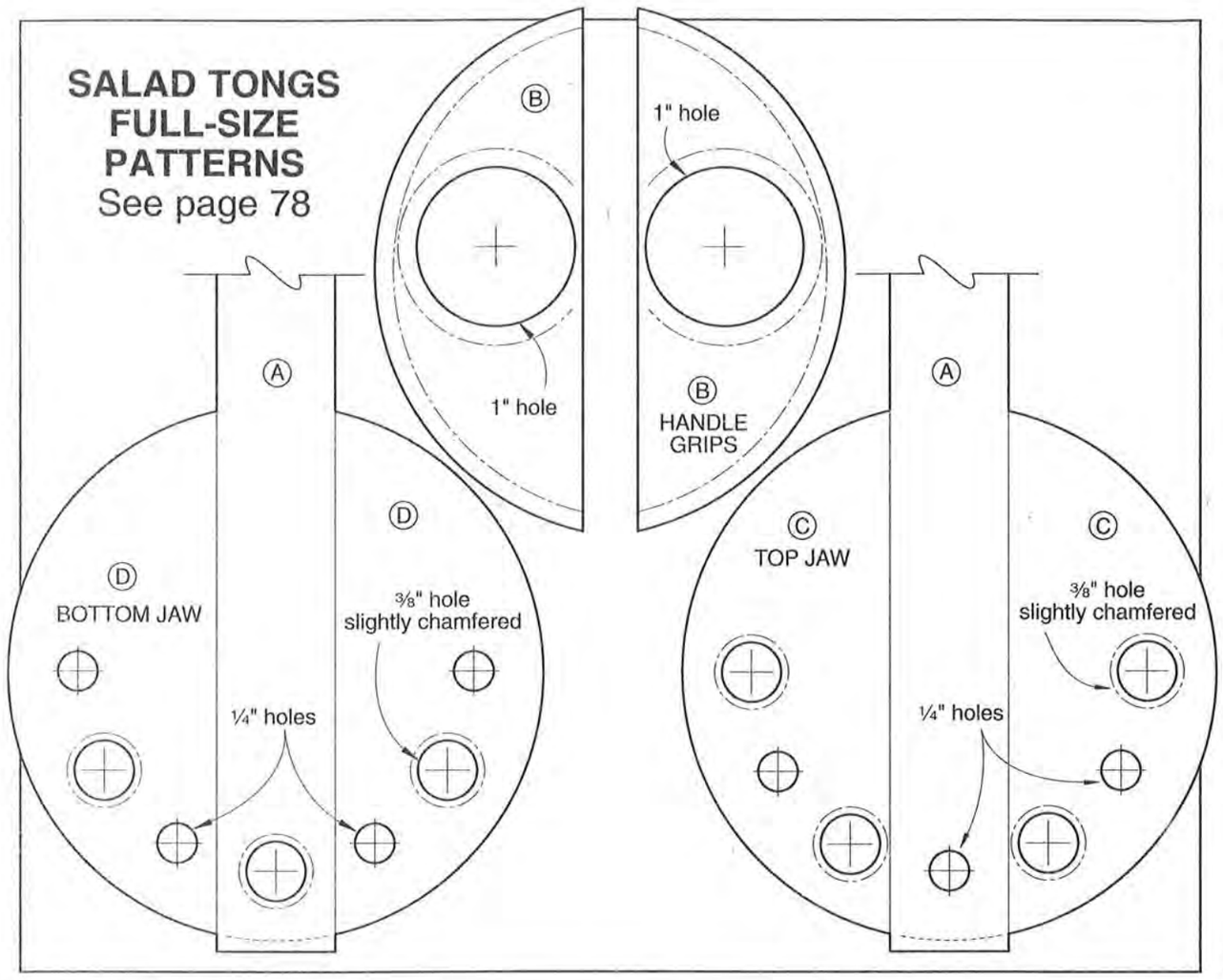

BAND BENDING FORM

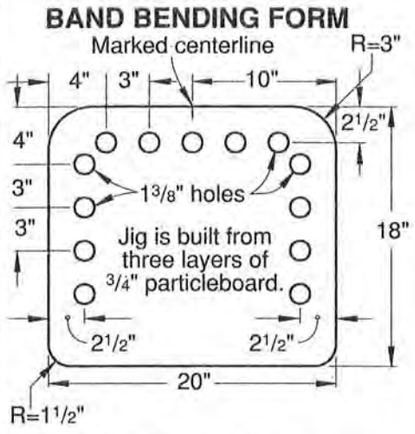

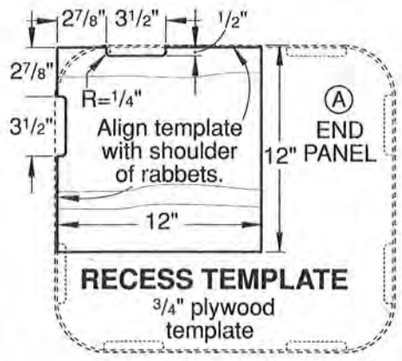

STEAMER TRUNK FULL-SIZE PATTERN

See page 56

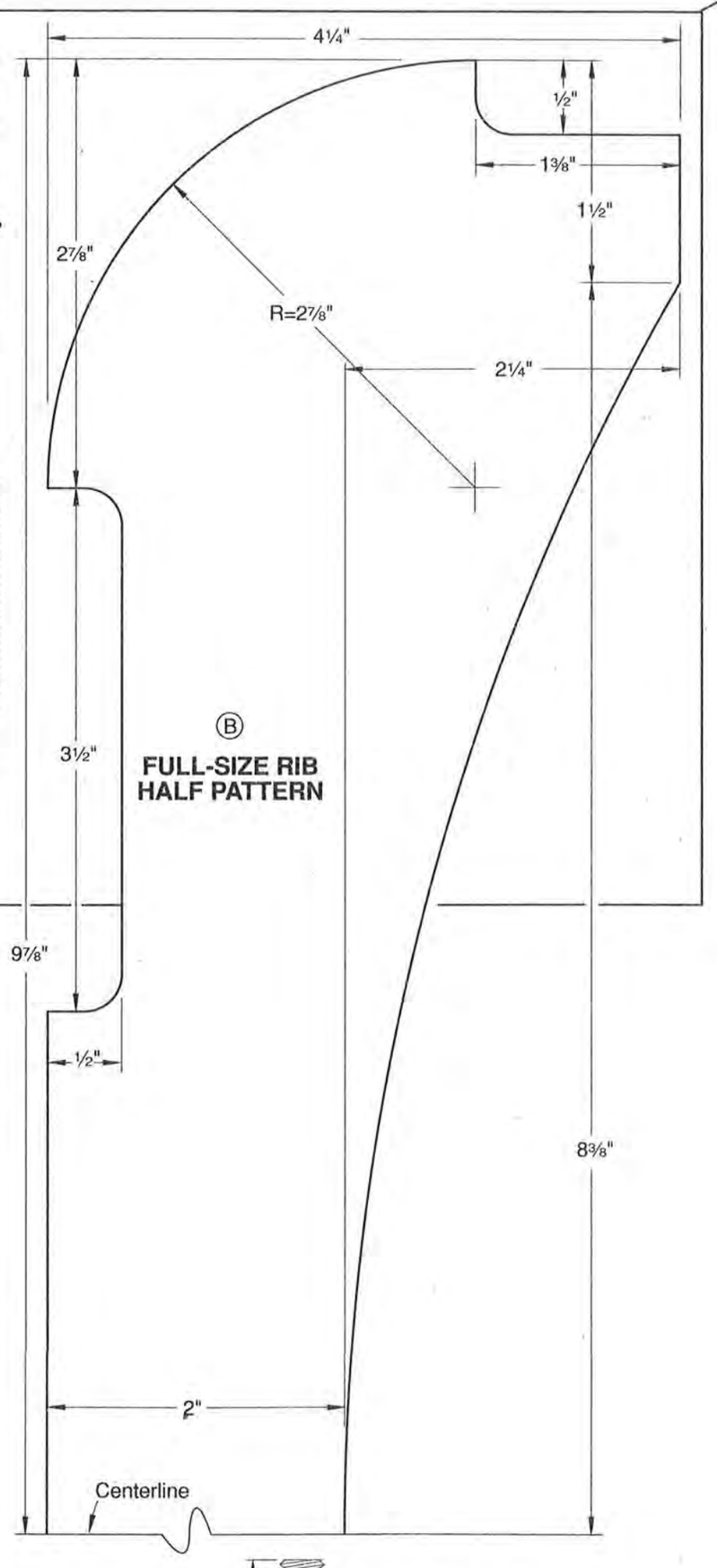

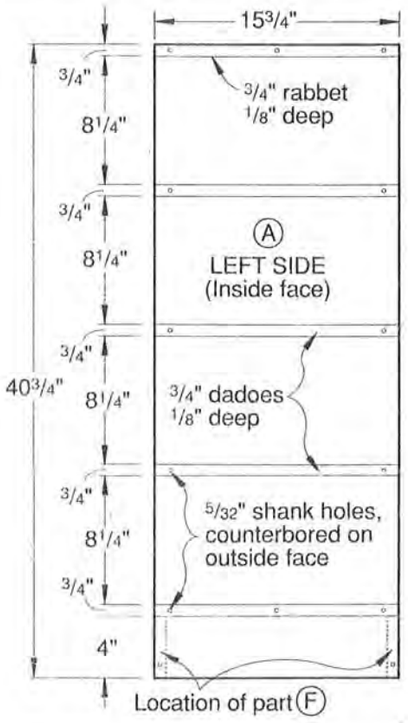

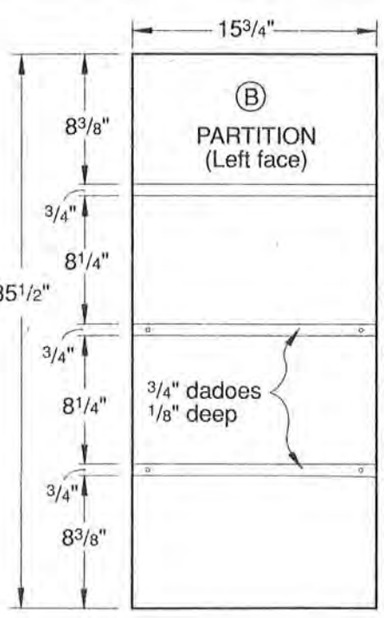

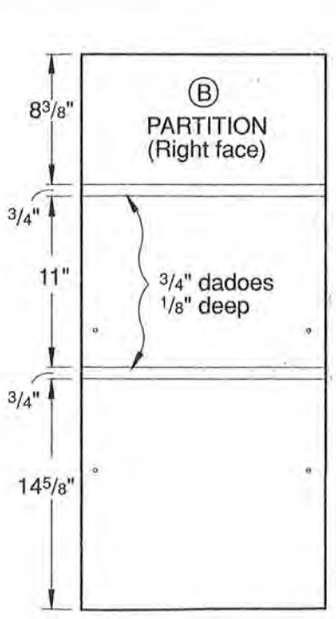

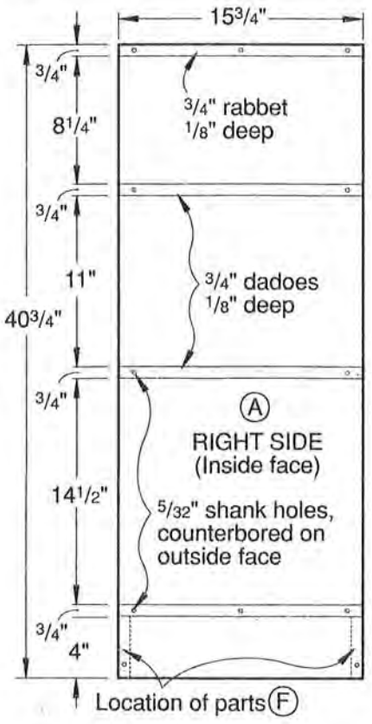

PARTS VIEW

MULTIPURPOSE STORAGE

See page 90

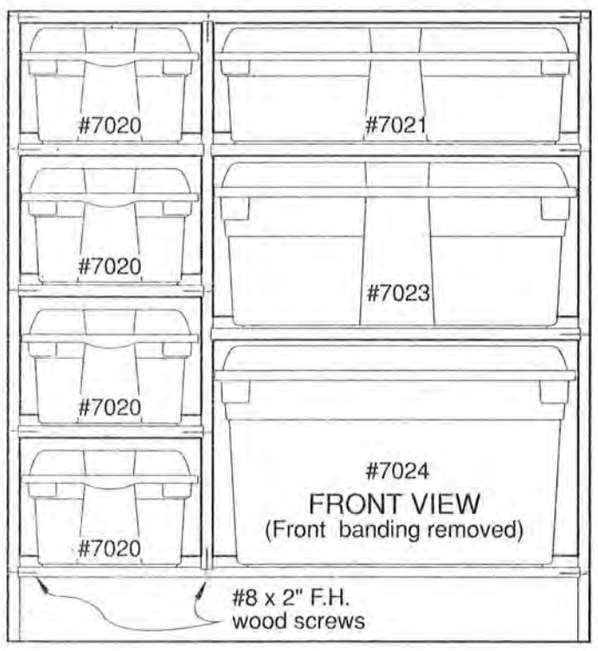

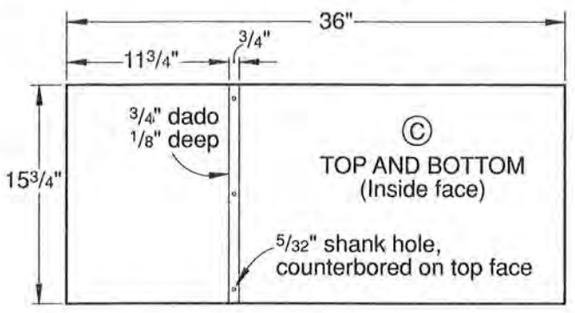

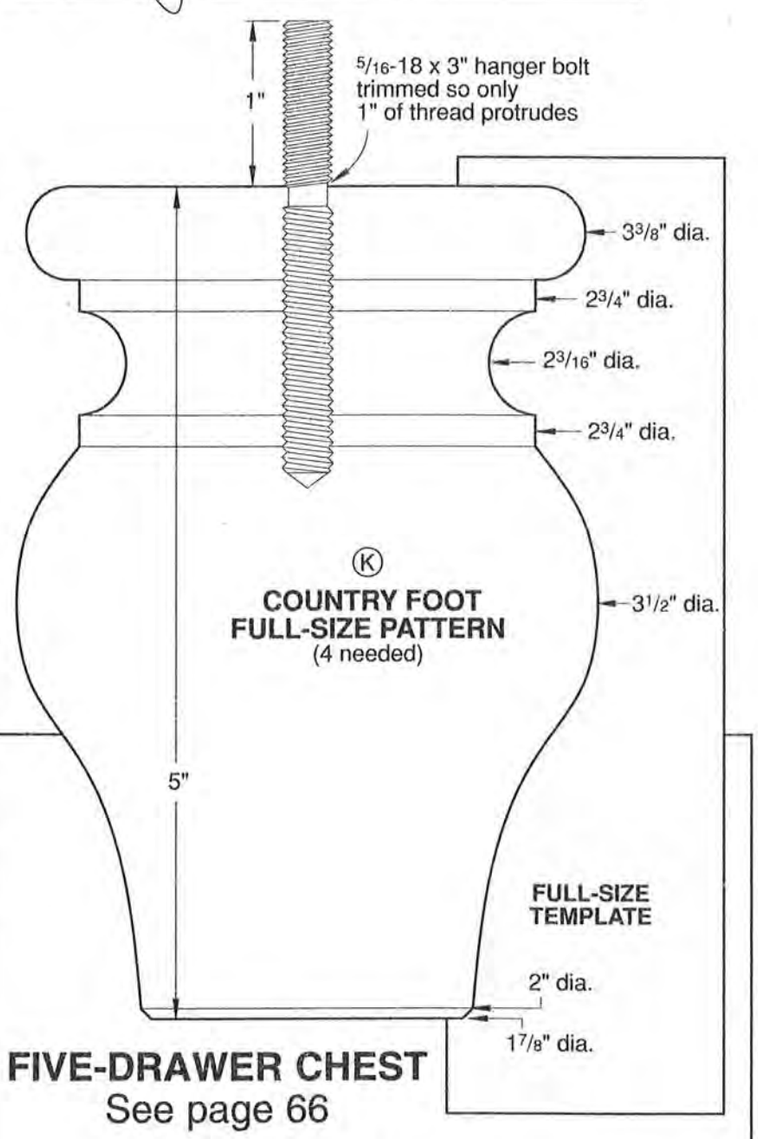
1"
5/16-18 x 3" hanger bolt trimmed so only 1" of thread protrudes
3 3/8" dia.
2 3/4" dia.
2 3/16" dia.
2 3/4" dia.
Ⓚ COUNTRY FOOT FULL-SIZE PATTERN (4 needed)
3 1/2" dia.
5"

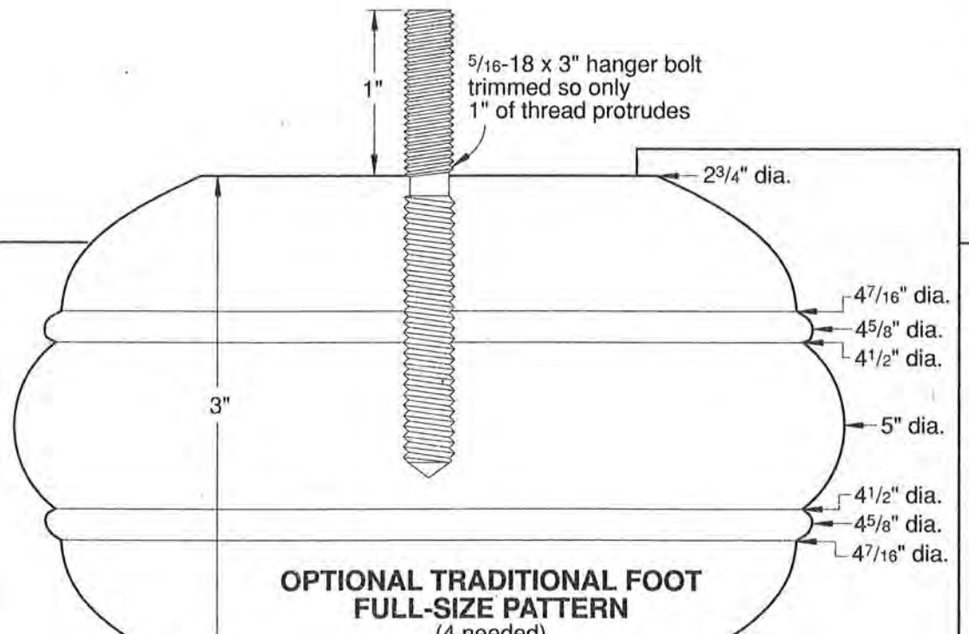

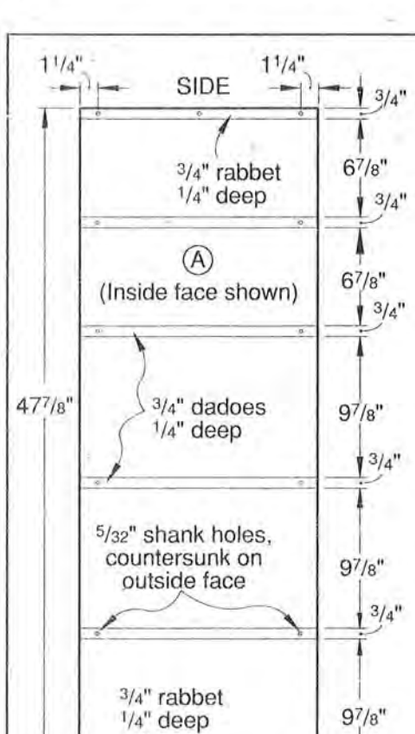

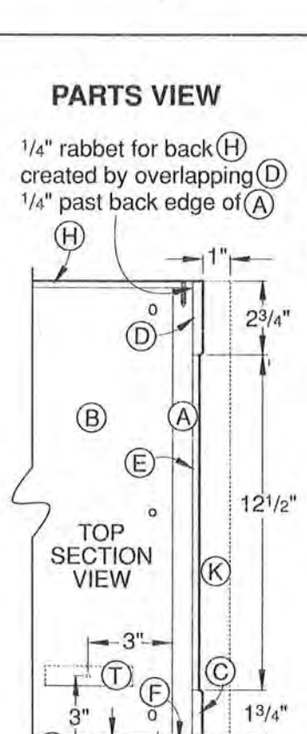

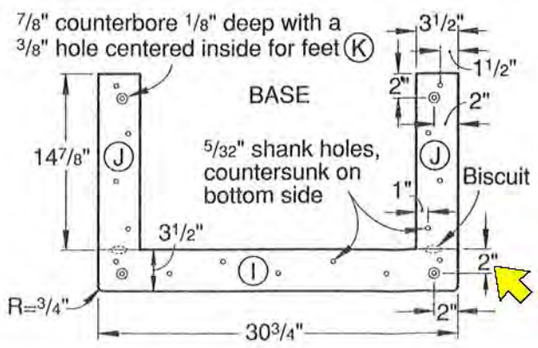

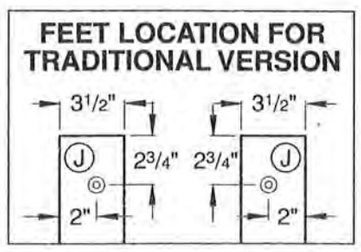

FIVE-DRAWER CHEST

See page 66

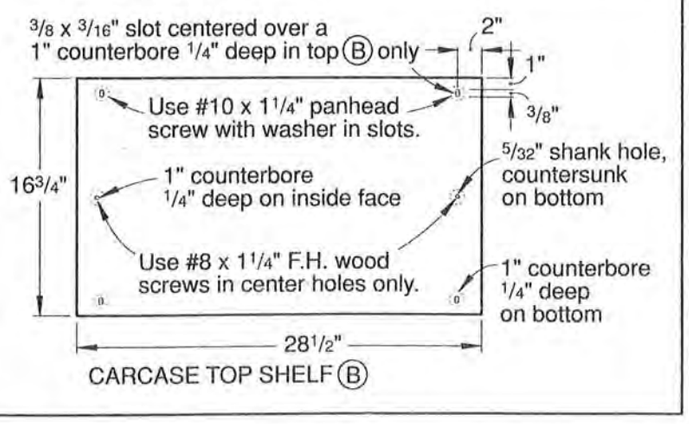
3/8 x 3/16" slot centered over a 1" counterbore 1/4" deep in top Ⓑ only
2"
1"
3/8"
Use #10 x 1 1/4" panhead screw with washer in slots.
16 3/4"
1" counterbore 1/4" deep on inside face
5/32" shank hole, countersunk on bottom
Use #8 x 1 1/4" F.H. wood screws in center holes only.
1" counterbore 1/4" deep on bottom
28 1/2"
CARCASE TOP SHELF Ⓑ